# *SECTION IV*

# *2007*

# *BENCH*

# *BG-4*

# *RULES*

**2007 BENCH BG-4 CONTEST RULES**

**INDEX**

Section IV

Title Page

Rules Governing 2007 Bench BG-4 Contest and Interpretations of Discount Cards....1

Statements of Fact (Bench Contest) ....11

Identification of Parts ....18

**RULES GOVERNING 2007 BENCH BG-4 CONTEST**
**AND INTERPRETATIONS OF DISCOUNT CARDS**

1. Each participant must be under guard before the start of the Contest in a location assigned by the Chief Judge and must remain continuously under guard until time to work the problem. Participants under guard must be in a location where they will be unable to obtain any information concerning the problem to be worked. Any participant receiving information concerning a Contest problem prior to starting to work the problem will be disqualified by the Chief Judge and the Assistant Chief Judge. No person, except guards and Contest officials assigned to give the written examination, will be allowed to communicate with any participant under guard. Those who have performed will not be permitted to communicate with any participant awaiting their turn to perform.

2. Any indication of receiving unauthorized information during the working of the problem may result in disqualification as determined by the Chief Judge and the Assistant Chief Judge. No one except judges, Contest officials, and working participants will be permitted in the work area, unless special approval is given by the Chief Judge. Communication with bench participants, except for the judges, is prohibited. News media and photographers who wish to be in the working area must receive permission from the Director and be accompanied by a Contest official.

3. Any bench participant not in place and ready at the time specified will be disqualified from the Contest.

4. The bench participant will be provided with two BG-4 apparatuses (one disassembled, one assembled), an RZ-25 tester, a stopwatch, defogging solution, leak detector fluid, test kit and a tool kit. Only the tools and fluid provided will be used for testing and assembly of the apparatus. The work at the bench will consist of (1) a visual examination of a disassembled BG-4 and the proper assembly and preparation for use in rescue work. This will include correcting any predetermined problem(s) so that the apparatus is in proper working order. Simulating defogging of the facepiece lens will be done as part of the visual examination. This visual examination, correcting predetermined problem(s), and proper assembly can be done at any time allowed for working of the problem. (2) Test the assembled BG-4 apparatus with a RZ-25 tester, and correct the predetermined problem(s) so that the apparatus is in proper working condition. Except for removing the plug-in coupling from the breathing hoses at the connection, the assembled BG-4

apparatus cannot be disassembled to look for problems, until the hoses are attached to the RZ-25 tester. When testing is completed on the assembled BG-4 apparatus, the hoses shall be removed from the tester, connected to the facepiece, and the back cover installed. This shall be done before the clock is stopped.

5. Spare parts to correct the predetermined problem(s) will be provided once the bench participant has specifically identified the problem. This will require the participant to point out the exact location of the deficiency. (Example: Positive pressure leak in the breathing bag. Participant will identify the location of the hole.)

6. When an unplanned deficiency is encountered with the apparatus, the participant will be notified by the judges that the deficiency is not part of the problem. The judge will stop the clock, and any time used to correct the deficiency will not be charged to the working time. However, the process of verbal elimination shall not be used by the bench participant to find the predetermined problem(s). If it becomes obvious to the judges that this is occurring, the first offense will result in a warning, the second offense a discount, and the third offense could result in disqualification as determined by the Chief Judge. (Example: Participant verbally identifies a deficiency with every part of the facepiece when only one predetermined problem exists.)

7. The bench participant will not be allowed to bring any materials, written information, or records to the work site. The participant will not have to create a test record; however, he or she may write the test from memory on paper that will be provided for that purpose after the official working time has started.

8. Tests will be performed in sequence on the assembled BG-4 apparatus using the standard test procedures with the RZ-25 tester as outlined in the Draeger BG-4 Service Manual (P/N 4056575 - Rev. 0, April 2002) or Draeger Instruction for Use manual for PSS BG-4 AP/CP (Second Edition 2004).

9. A maximum of 30 minutes will be allowed to complete the problem. The bench judge will inform the participant when he has one minute remaining to work the problem. At the completion of the problem, the judge(s) and the participant will note the working time of the problem with the official timekeeper. Work done after the clock is stopped will not be recognized.

10. Manually abusing or intentionally over or under pressurizing the RZ-25 tester substantially will be considered abusing the equipment. If the participant is observed abusing the RZ-25 tester, the first offense will result in a warning, the second offense will result in a discount, and the third offense could result in disqualification as determined by the Chief Judge.

A. Written Examination of Bench Participant

1. The written examination shall consist of 30 questions. Twenty questions for the written examination will be taken verbatim from the Statements of Fact which will be fill in the blank and each blank shall represent a key word with no more than three blanks per statement. Ten questions will be taken verbatim from identification of parts. Thirty minutes will be allowed for the written examination.

2. In special circumstances, individual bench participants may be given oral instead of written examinations by at least two judges. Requests for consideration shall be presented to the Director of the Contest at the time of registration.

3. Bench participants will be separated to the extent possible, and every effort will be made to prohibit discussion of questions and answers among the bench participants.

B. Miscellaneous

1. In the event of ties in the Bench Contest, the number of discounts at bench will be the first tie breaker; the number of discounts on written examination will be the second tie breaker; and the official working time at bench in minutes and seconds will be the third tie breaker.

2. The bench participant and trainer will report to a designated location to review and prepare protests within one hour of notification. Twenty minutes will be given to review and prepare written protests. All protests will be considered by the Chief Judge and his/her Assistant and their decision will be binding.

3. Bench participants must be bonafide employees of the mining industry or members of mine rescue teams designated to fulfill the requirements of 30 CFR Part 49. This does not exclude bench participants whose team is not participating at the National Contest.

4. Disputes with regard to the Bench Contest (except discounts), shall be immediately filed with the Director. Disputes filed shall be in writing and set forth incidents, times, names, source of information and act complained against. Complainant shall remain accessible to the Director until the complaint is resolved. A decision by the Director shall be final.

## Interpretations of Discount Sheet

A. Written Examination

1. For each incorrect statement_____1

B. Time

The time will be recorded in minutes and seconds.

C. Competition at Bench

1. Failure to verbally identify each test being conducted_____2

   Verbally identify each test being performed.

2. Failure to verbally identify each problem_____5

   Failure to verbally identify is also interpreted as failure to find the problem.

3. Failure to correct each problem_____5

   The bench participant shall properly correct the problem and continue with the proper tests. Once a bench participant finds a predetermined problem and does not correct it before continuing with the remaining tests, he/she shall receive a five point discount for continuing without correcting the problem and a pending five point discount for failing to correct the problem. If all of the remaining tests are properly conducted and passed and the participant returns to the uncorrected problem and corrects it, the pending five point discount will not be assessed. Should the participant continue on from this point and

properly conduct all of the remaining tests again, he/she would also have the original five point discount for continuing tests removed.

4. Failure to conduct any visual examination or test on the BG-4, each test_____5

5. Failure to tighten connections properly during assembly or testing, each connection_____1

   All connections must be tightened on the apparatus and verbally identified as hand tight at the time the connection is made. Failure to verbally identify at the time the connection is being made will result in a one point discount for each. Zero adjustments shall be made on RZ tester prior to connecting the breathing hoses to the RZ-25 tester.

   This includes:

   .Cap on drain valve - hand tight
   .Drain valve to breathing bag - hand tight
   .Minimum valve to breathing bag - hand tight
   .Minimum valve to O2 supply line - hand tight
   .Cylinder connection - hand tight
   .Regenerative canister connections - hand tight
   .Relief valve connection - hand tight
   .Cooler to bag connection - hand tight
   .Distribution hose connection - hand tight
   .Breathing hoses (once testing has begun or during the visual examination on the disassembled apparatus) - hand tight
   .Hose adapter on the RZ-25 - hand tight

   Once the zero adjustment on the tester has been made, do not readjust setting for balance of tests.

6. Failure to comply with rules not covered in discount sheet, each infraction_____2

   If the discount is not listed on the discount sheet, and if it is not covered under one of the approved rules of the Contest, do not improvise a discount to cover the suspected violation.

D. Visuals

1. Failure to conduct a proper visual examination of the frame/harness_____1

   The visual examination will include an examination of the harness assembly, frame, back cover, visible sealing rings, Monitron display or Sentinel, $O_2$ regulator, Anti-vibe and Monitron basic unit or switch box. Failure to examine and verbally identify the examination will result in one discount for each. (Maximum 4 points)

2. Failure to conduct a proper visual examination of the breathing bag_____1

   The participant will verbally identify that the breathing bag is being examined for pliability and signs of deterioration. Stretching or manipulating the breathing bag with a massaging action will be part of this examination. The participant will verbally identify that the sealing surfaces are being examined for signs of deterioration or damage. Also, the minimum valve, drain valve, lever, and springs will be examined for damage. Failure to examine and verbally identify the examination will result in one discount for each. (Maximum 4 points)

3. Failure to conduct a proper visual examination of the $0_2$ cylinder_____1

   A proper cylinder examination includes a visual inspection of the cylinder. The participant will verbally identify the cylinder pressure on the gage, the pressure rating on cylinder, the hydrostatic test date, and identify if the cylinder is plus rated, if steel. Participant will inform the judge if the cylinder pressure is less than 2,680 PSI for Monitron or 2,600 PSI for Sentinel. Failure to examine and verbally identify the examination will result in one discount for each. (Maximum 4 points)

4. Failure to conduct a proper visual examination of the regenerative canister_____1

   A proper examination includes a visual inspection for defects. If a factory packed canister is used, verbally identify that the sealing surfaces are not damaged, and identify the expiration date with month and year. If a reusable cartridge is used, a visual inspection for defects,

seal strap with tension spring hook, seal, scrubber screens and filler mats are required. Failure to examine and verbally identify the examination will result in one discount for each. (Maximum 3 points)

5. Failure to conduct a proper visual examination of the relief valve____1

   A proper examination includes a visual inspection for defects. Verbally identify that the valve and o-ring are not damaged.

6. Failure to conduct a proper visual examination of the cooler_____1

   A proper examination includes a visual inspection for defects. Verbally identify that the sealing surfaces are not damaged.

7. Failure to conduct a proper visual examination of the hoses_____1

   The participant will verbally identify that the hoses are being inspected for pliability and signs of deterioration. Stretching or manipulating the hoses with a massaging action will be part of this examination. The participant will verbally identify that the sealing edges, including bayonet rings are being examined for signs of deterioration. Failure to examine and verbally identify the examination will result in one discount for each. (Maximum 2 points)

8. Failure to conduct a proper visual examination of the coupling, inhalation and exhalation valves_____1

   A proper examination includes a visual inspection for defects, sealing surfaces and valve discs.

9. Failure to conduct a proper visual examination of the facepiece_____1

   The visual examination will include an examination of the head strap assembly, mask body (including sealing edges), the lens, speaking diaphragm, and wiper. Failure to examine and verbally identify the examination will result in one discount for each. (Maximum 4 points)

E. RZ-25 Tester

1. Failure to conduct a proper low pressure warning test_____2

   Connect breathing hoses to test unit. Set RZ-25 tester on positive pressure pumping, gently activate bellows, and watch the pressure gauge. If the low pressure warning is operating properly, warning should be activated when the pressure is less than 1.25 mbar for the Monitron or 1.4 mbar for the Sentinel.

2. Failure to conduct a proper inhalation valve test_____2

   The RZ-25 tester is set on positive pressure pumping. Tightly pinch the exhalation hose with your hand. Gently activate bellows until 10 mbar is indicated on the pressure gauge.

3. Failure to conduct a proper exhalation valve test_____2

   Set the RZ-25 tester on negative pressure pumping. Tightly pinch the inhalation hose with your hand. Gently activate bellows until -10 mbar is indicated on the pressure gauge.

4. Failure to conduct a proper drain valve test_____2

   Set RZ-25 tester on positive pressure pumping. Pump bellows until 10 mbar is indicated on the pressure gauge. While pumping, fit the open side of the sealing cap over the tappet of the relief valve and hold it tightly until it is pressed into place by the inflated breathing bag. The drain valve must not open at 10 mbar.

5. Failure to conduct a proper leak test with positive pressure_____2

   Set RZ-tester on leak test. Bleed needle to 7 mbar and start stopwatch. Needle should not change more than 10 mm $H_20$ or 1 mbar in 60 seconds. Set RZ-tester on negative pressure pumping, the breathing bag is vented. Remove the sealing cap.

6. Failure to conduct a proper relief valve test_____2

Set RZ-tester on positive pressure pumping. Pump the bellows until the relief valve opens, it should open between 2 and 5 mbar. Participant will verbally state reading of valve opening.

NOTE: An alternate relief valve test may be conducted by observing the reading on the RZ tester (with the tester set on leak test). Flow of oxygen from the constant dosage will cause relief valve to open between 2 and 5 mbar. If this alternate test is used, it must be conducted after the completion of the bypass valve test.

7. Failure to conduct a proper high pressure leak test_____2

A. MONITRON: Set RZ-25 tester on leak test. Open cylinder valve. Watch the display unit, the cylinder pressure is indicated here. If it is lower than 2680 psi. change the oxygen cylinder. If it is greater than 2680 psi., alarm sounds once. Display reads CCr, as soon as the pressure display appears, close cylinder valve.

The test result is available after approx. 25 seconds:
Alarm sounds once.
Green indicator flashes.
Display reads OCr, as soon as the pressure display appears, open cylinder valve.

B. SENTINEL: Set RZ-25 tester on leak test. Open cylinder valve. Watch the Sentinel unit, the cylinder pressure is indicated here. If it is lower than 2600 psi. change the oxygen cylinder. If it is greater than 2600 psi., alarm beeps two times. Sentinel indicates "close cylinder" icon, as soon as the icon appears, close cylinder valve.

Result of the tests is output after approximately 15 seconds. If the PSS BG-4 is okay, "open cylinder valve" icon, as soon as the icon appears open cylinder valve.

8. Failure to conduct a proper constant metering valve test_____2

Set RZ-25 tester on positive pressure pumping. Pump bellows until the breathing bag is inflated. While pumping, fit the open side of the

sealing cap over the tappet of the relief valve and hold it tightly until it is pressed into position by the inflated bag. Set the RZ-tester on Red Dosage 0.5 - 2 L/min. The constant metering quantity should lie between 1.5 and 1.9 L/min. Participant will verbally state dosage value on the red scale, as soon as the pointer has stopped moving.

9. Failure to conduct a proper minimum valve test_____2

   Set RZ-25 tester on negative pressure pumping. The breathing bag is vented automatically, remove sealing cap, pump bellows until minimum valve is heard to open in breathing bag and there is a hissing sound. Watch the pressure gauge, the minimum valve should open at a value between 0.1 and 2.5 mbar. Participant will verbally identify reading of opening of valve.

10. Failure to conduct a proper bypass valve test_____2

    Set RZ-tester on leak test. Press red button for bypass valve. Oxygen must be heard to flow into the circuit, the breathing bag inflates.

11. Failure to conduct a proper low/residual pressure warning test_____2

    Close cylinder valve. Watch the display or sentinel unit. The warning should be generated at approx. 700 psi. Alarm sounds intermittently, red indicator flashes. Unplug coupling from RZ-tester. Participant will verbally state reading.

12. Failure to conduct a proper battery test_____2

    A. The Monitron system automatically checks the battery at pressures below 70 psi. If the battery capacity is sufficient, the Monitron system will switch off immediately after the test completes.

    B. On activation and deactivation, the Sentinel automatically checks and displays the battery capacity. To switch off the Sentinel, simultaneously press the right and left hand button until the single sharp audible bleep sounds. Release the buttons. For three seconds, Sentinel shows the battery status. Sentinel switchs off.

**STATEMENTS OF FACT**
**BENCH BG-4 CONTEST**

1. A positive pressure leak could be caused by a leakage in or at device components.

2. The battery in the Monitron basic unit should be replaced every 6 months.

3. Dow Corning 111 is to be used to lubricate o-rings.

4. The pressure relief valve is designed to open when the pressure within the breathing circuit is between +20 and +50 millimeters (+2 mbar and +5 mbar) of pressure measured on the water gage.

5. To prepare for testing adjust zero point of the RZ-25 tester.

6. Test adapter is used to connect the BG-4 apparatus to the RZ-25 tester.

7. A leaky exhalation or inhalation valve could be caused by a defective valve seat of valve disc.

8. During the exhalation valve test, if valve is operating properly, -10 mbar is indicated on the pressure gauge.

9. The EPDM breathing hoses use quarter turn connectors.

10. During testing of the inhalation valve, if valve is operating properly, +10 mbar is indicated on the pressure gauge.

11. During the positive pressure leak test, the pressure change within 1 minute must be lower than 1 mbar.

12. Only DRAGERSORB 400 is to be used to fill the refillable cartridge.

13. The factory filled cartridge is good for 4 years from the manufacture date.

14. A positive pressure in the breathing circuit prevents ambient air from entering the system.

15. The BG-4 is approved with one time factory packed or refillable style cartridge.

16. The Monitron electronic monitoring system comprises a sensor unit, basic unit, and display unit.

17. A steel cylinder is full at 3135 psi when a + is stamped at hydrotest.

18. The BG-4 constant dosage must be 1.5 to 1.9 L/min.

19. The drainage valve should not open at less than 10 mbar.

20. A fully filled steel oxygen cylinder holds 440 liters of medical oxygen.

21. The accuracy of the Monitron pressure measurement is +or- 2% of the final value.

22. Never replace the battery in potentially explosive areas.

23. First stage reducer dosage output is 1.5 to 1.9 L/min.

24. First stage reducer bypass output is >50 L/min.

25. The weight of a fully charged BG-4 apparatus is 15kg (33 lbs)

26. The first stage reducer relief valve activation is 6 bar (87psi)

27. Check the supply of oxygen gas on the display unit at intervals of approximately 15 minutes.

28. During the constant dosage test, the breathing bag is inflated, the RZ-25 tester is set to red dosage, and the pressure relief tappet is capped.

29. During the constant dosage test, the needle of the RZ-25 tester should automatically settle between 1.5 and 1.9 LPM.

30. The minimum valve provides greater than 80 L/min flow.

31. The breathing bag has a 5.5 liter volume.

32. Insert speech diaphragm, install threaded ring and tighten with spanner wrench.

33. The belt and harness must be dried prior to storage, to prevent growth of mold and fungus.

34. The pressure reducer must be rebuilt/overhauled every 6 years.

35. Only the following batteries are approved for use in the Monitron:
Duracell
Eveready
Panasonic
Rayovac

36. The monitron converts pressure into digital signal.

37. The cylinder connector and cylinder valve must not be contaminated with oil or grease.

38. Two hexagon socket head screws are used in the battery cover of the monitron basic unit.

39. Rubber parts must be particularly protected from direct exposure to radiation.

40. Do not use any solvents, such as acetone, alcohol, benzene, white spirit, trichlorethylene, etc. for cleaning rubber and silicone parts.

41. The first low-pressure warning occurs when the pressure drops to approximately 700 psi.

42. At the first low-pressure warning approximately 75% of the oxygen has been used up.

43. The last low-pressure warning occurs when pressure has dropped to approximately 145 psi.

44. During the low pressure warning test, the alarm should activate at approximately 700 PSI for a 4 hour apparatus.

45. At the last low-pressure warning approximately 95% of the oxygen has been used up.

46. The Monitron switches off automatically when the pressure drops below 70 psi and after automatically testing the battery.

47. When the first low pressure warning occurs, the alarm sounds intermittently for approximately 30 seconds and the red indicator flashes constantly.

48. When the last low pressure warning occurs, the alarm sounds intermittently without stopping and the red indicator flashes constantly.

49. Medium pressure in the BG-4 is between 58 psi and 64 psi.

50. Medium pressure is delivered to the minimum valve.

51. The Monitron has a piezoelectric alarm.

52. The drainage valve opens at more than 10 mbar.

53. The BG-4 breathing circuit is designed with an air cooler that can be filled with ice to reduce the temperature of the inhaled breath.

54. The venting hole located in the air cooler lid must point upwards.

55. All parts which come in contact with the exhaled air must be thoroughly cleaned and disinfected after use.

56. Disinfect parts by immersing them in a disinfectant bath using Airkem 33.

57. Before washing the minimum valve, it is necessary to isolate the minimum valve with plug.

58. Attach minimum valve to breathing bag so that the pin of the minimum valve and the mark on the breathing bag line up.

59. All parts which have been disinfected should be rinsed thoroughly under running water.

60. CO2 absorber is not approved for use after indicated expiration date.

61. The maximum temperature of the air used to dry parts should not go above 60 degree C (140 degree F).

62. Replace the high-pressure O-ring located on the pressure reducer yearly for units which are in constant use.

63. U.S. D.O.T. hydrotest composite cylinders every 5 years.

64. Replace the o-ring at the plug-in coupling at least once every year for units which are in constant use.

65. The inhalation valve should be replaced every 3 years for units which are in constant use.

66. The exhalation valve should be replaced every 3 years for units which are in constant use.

67. The o-ring under the speech diaphragm should be lubricated with Dow Corning 111.

68. The pressure reducer should be returned to the manufacturer or their agent for complete overhaul after at least 6 years usage.

69. A steel oxygen cylinder must be retested by a certified testing facility every 5 years.

70. The BG-4 is approved for use at temperatures above -5 degree C (23 degree F)

71. The breathing bag is made of polyurethane.

72. A defective pressure reducer should be returned to the manufacturer or their agent for service as needed.

73. Only oxygen (medical grade or better) with > 99.5% purity is to be used to fill the BG-4 oxygen cylinders.

74. The use of ice in the cooling system is only required at ambient temperature above 0 degree C (32 degree F).

75. Pressurized oxygen in contact with oil, grease, or other contamination can result in fire or explosion.

76. Battery test ll is performed with each opening of the cylinder valve.

77. Battery test l is performed with each shutting off of the cylinder valve.

78. A defective pressure reducer is the probable cause if the manual by-pass valve does not blow-off.

79. If the pressure indication is out of indication tolerance the monitron display unit should be replaced.

80. If the display does not read properly press a magnet on the rear of the Monitron basic unit and conduct a master reset.

81. Bypass output is > 50 L/min.

82. Relief valve activation is 6 bar or (87 psi).

83. The oxygen cylinder safety burst disc ruptures at 4,000 psi (275 bar).

84. Refillable cartridge concerns are over packing and under packing.

85. The EPDM and silicone masks allow 90% peripheral vision.

86. Polycarbonate or plexiglas lenses can be used in the mask.

87. A minimum of 2680 psi is needed for the BG-4 to perform a proper high pressure leak test.

88. The drainage valve opens at approximately 15 mbar and is therefore out of the RZ reading range.

89. To prepare the ice pack:
Fill the ice receptacle with water up to 2 inches from rim
Freeze at least 16 hours @ -15 degree C (5 degree F)
Fill to rim with water
Freeze again for another 8 hours

90. Never use a leaking mask.

91. If the speech diaphragm is deformed or shows signs of damage, it must be replaced.

92. The BG-4 display lights up when the button is briefly pressed.

93. The period of use since commencing the mission is indicated on the display in minutes when the button is pressed for approximately 3 seconds.

94. Do not re-use factory packed cartridges.

95. The breathing hoses are equipped with anti-crush rings.

96. The shelf life of the factory packed CO2 absorber is reduced after installation in the BG4, provided that the breathing bag, breathing hose and relief valve are connected and the breathing circuit is sealed by means of sealing cap.

97. After a factory packed CO2 absorber has been installed in an apparatus, the installation date must be marked on the housing.

98. When conducting component checks use a test pressure between +7 mbar and +10 mbar with a max pressure loss of 1 mbar/min.

# BG-4

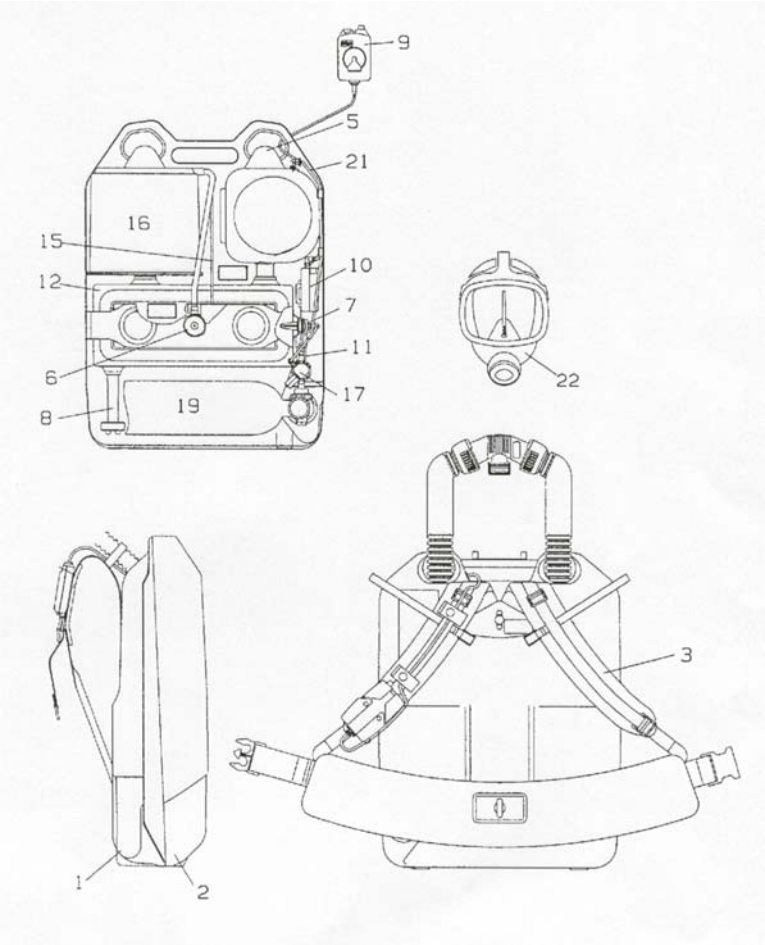


| 1<br>Cons. No. | 2<br>Designation | 1<br>Cons. No. | 2<br>Designation |
|---|---|---|---|
| 1 | Carrying Housing | 12 | Breathing Bag |
| 2 | Cover Shell , complete | 15 | Lever, Complete |
| 3 | Shoulder Pad Assembly | 16 | CO2 Absorber |
| 5 | Cooler | 17 | Pressure Reducer BG4 |
| 6 | Relief valve, Complete | 19 | Oxygen Cylinder |
| 7 | Minimum Valve | 21 | Distribution Hose |
| 8 | Drain Valve | 22 | Panorama Nova Mask |
| 9 | Display Unit | | |
| 10 | Basic Unit AP | | |
| 11 | Sensor Unit | | |

## Cover

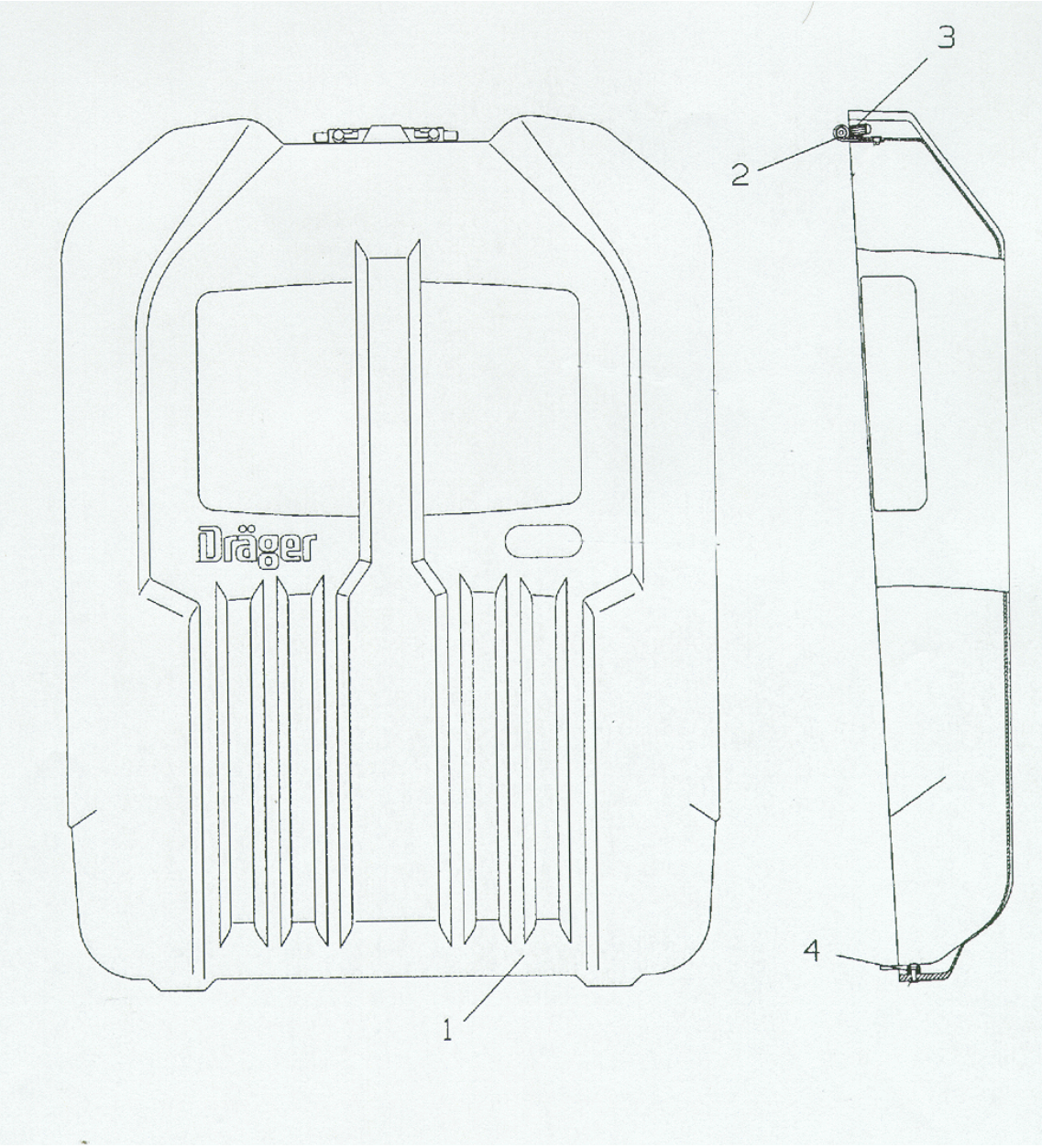


| 1 Cons. No. | 2 Designation | 1 Cons. No. | 2 Designation |
|---|---|---|---|
| 1 | Cover Shell | 3 | Grip Cap |
| 2 | Hinge | 4 | Button |

# Harness Assembly

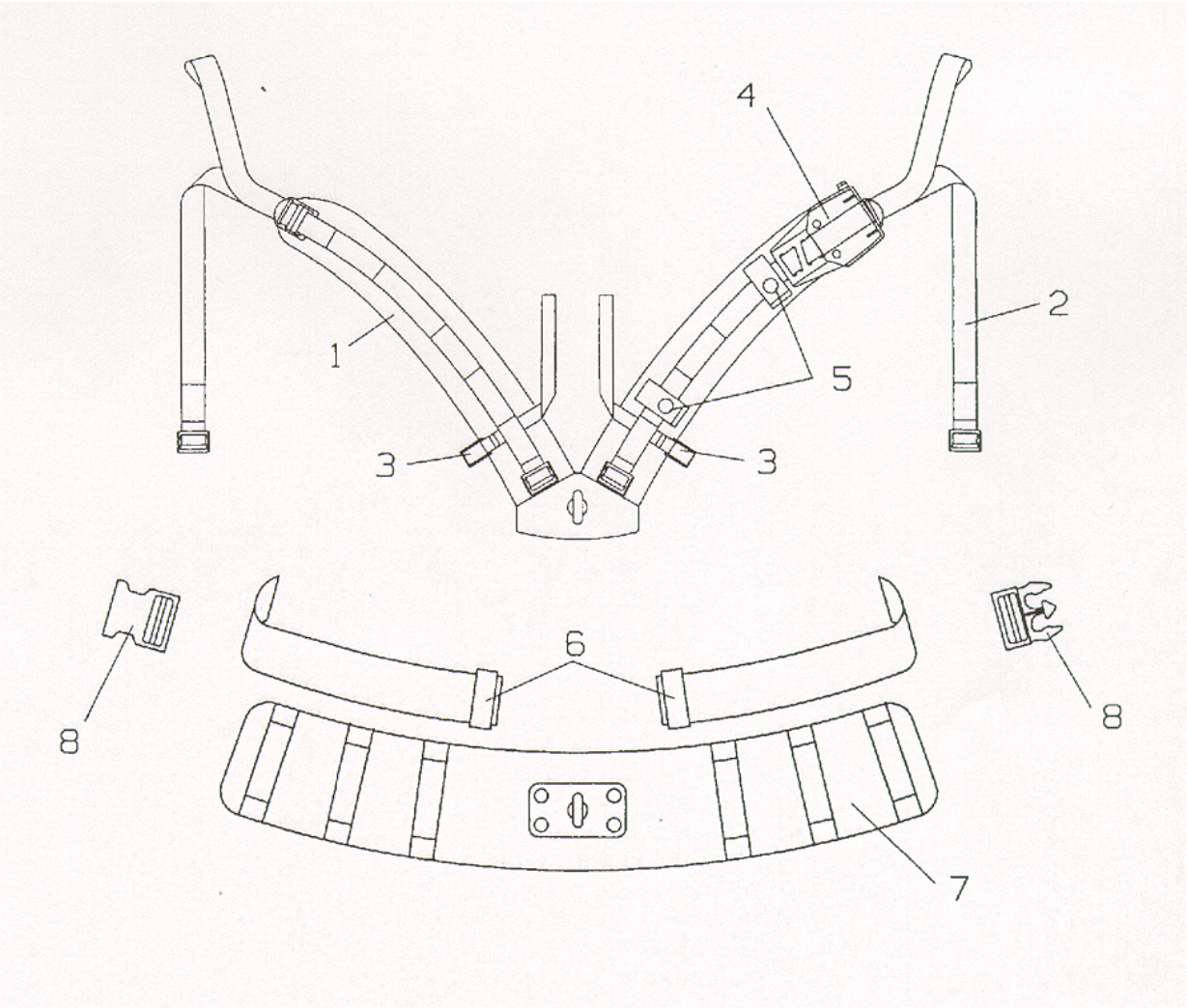


| 1 Cons. No. | 2 Designation | 1 Cons. No. | 2 Designation |
|---|---|---|---|
| 1 | Shoulder Pad Assembly | 5 | Hose Clip |
| 2 | Shoulder Adjusting Strap | 6 | Waistbelt without Buckle |
| 3 | Hose Holder | 7 | Waistbelt Pad |
| 4 | Holder | 8 | Buckle Set |

## Breathing Hose Assembly

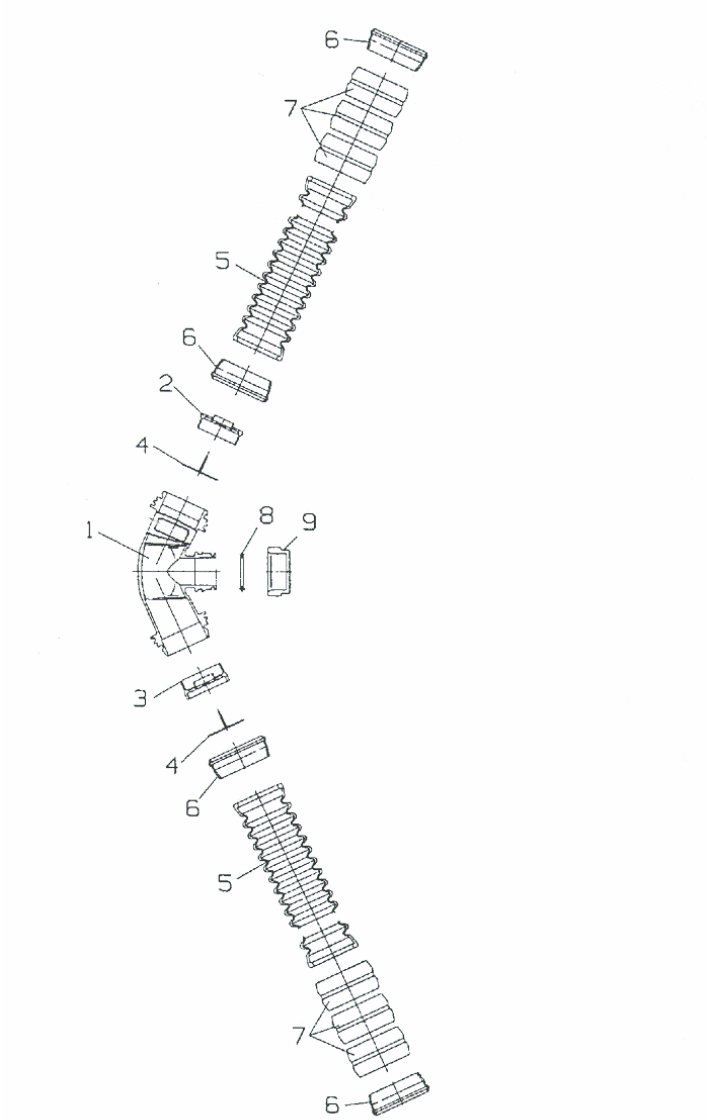


| 1<br>Cons. No. | 2<br>Designation | 1<br>Cons. No. | 2<br>Designation |
|---|---|---|---|
| 1 | Coupling | 6 | Bayonet Ring |
| 2 | Inhalation Valve Seat | 7 | Hose Holder |
| 3 | Exhalation Valve Seat | 8 | Toroidal Sealing Ring |
| 4 | Valve Disc | 9 | Sealing Cap |
| 5 | Corrugated Hose | | |

## Cooling Canister

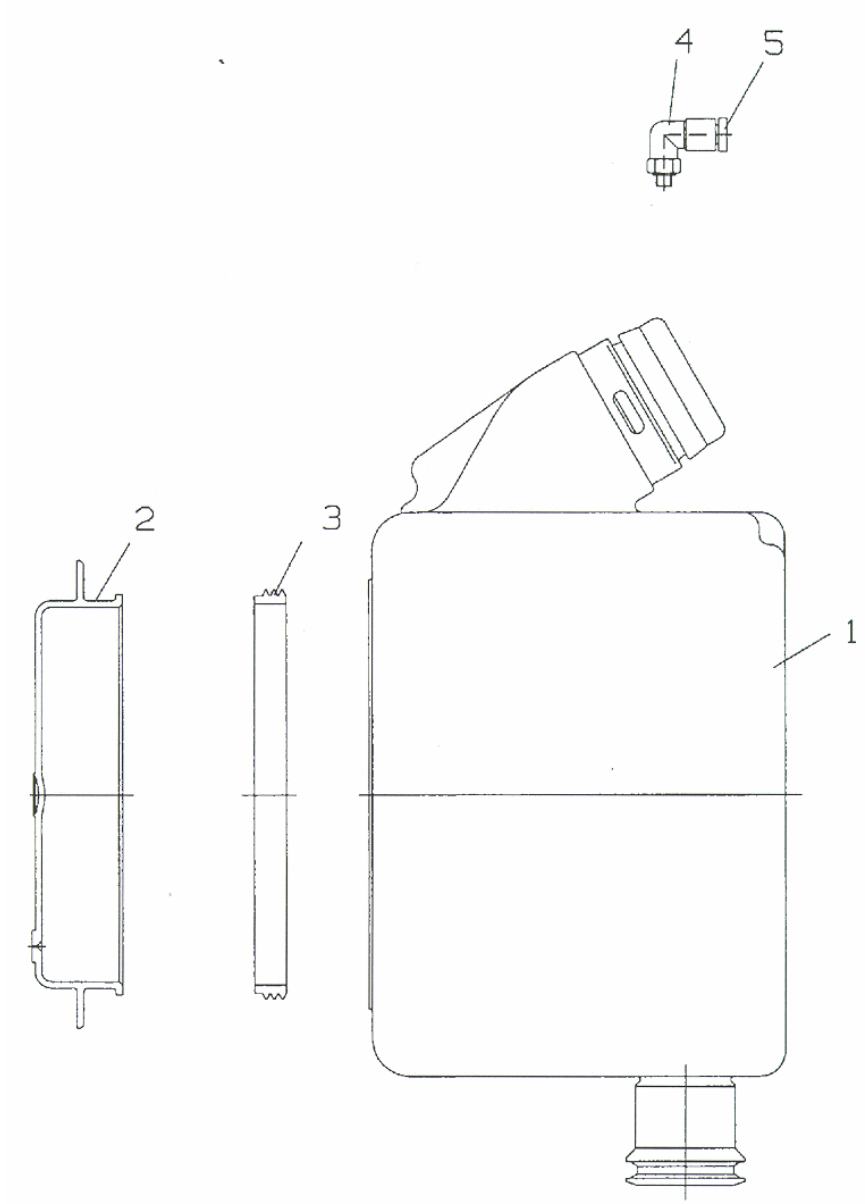


| 1 Cons. No. | 2 Designation | 1 Cons. No. | 2 Designation |
|---|---|---|---|
| 1 | Cooler | 4 | Angle Connector |
| 2 | Cover for Cooler | 5 | Reaction Ring |
| 3 | Gasket | | |

## Drain/Relief/Minimum Valve Assembly

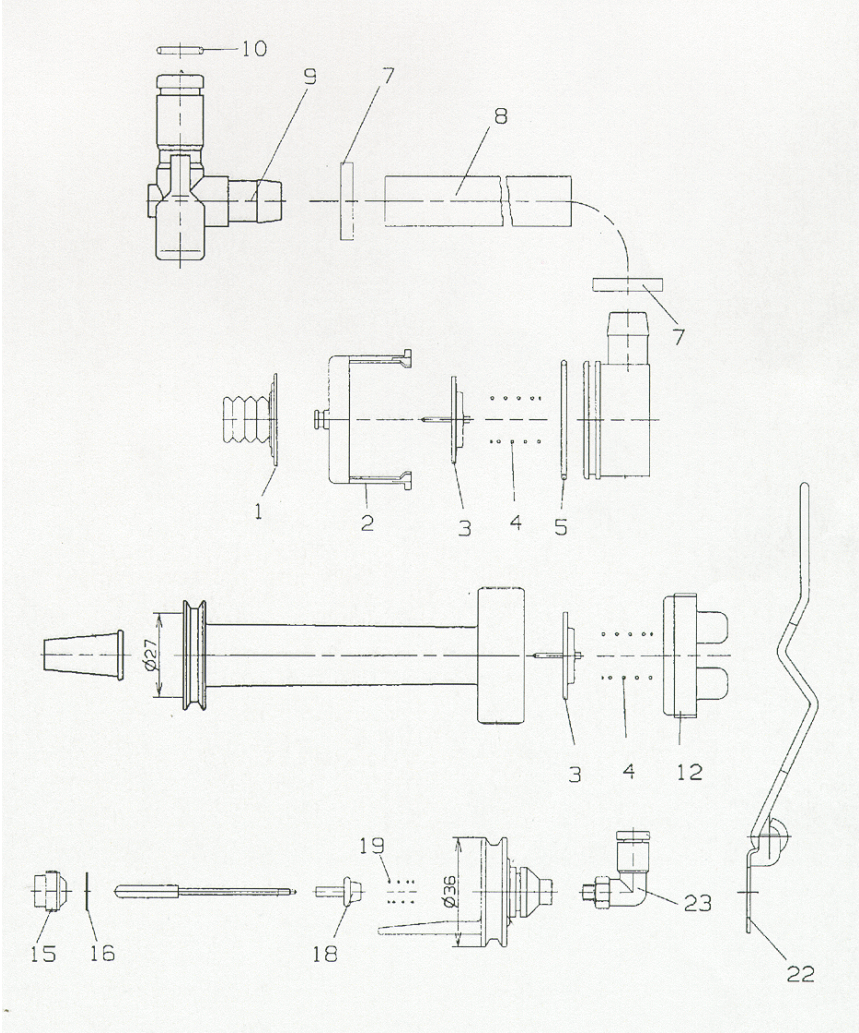


| 1<br>Cons. No. | 2<br>Designation | 1<br>Cons. No. | 2<br>Designation |
|---|---|---|---|
| 1 | Valve Disc | 12 | Cap |
| 2 | Crater Case | 15 | Valve Crater |
| 3 | Valve Disc | 16 | Washer |
| 4 | Relief / Drain Valve Spring | 18 | Valve Plate |
| 5 | O-Ring | 19 | Spring |
| 7 | Clamp Fitting | 22 | Clamp, Minimum Valve |
| 8 | Hose | 23 | Angle Connecter |
| 9 | Coupling | | |
| 10 | O-Ring | | |

# Monitron

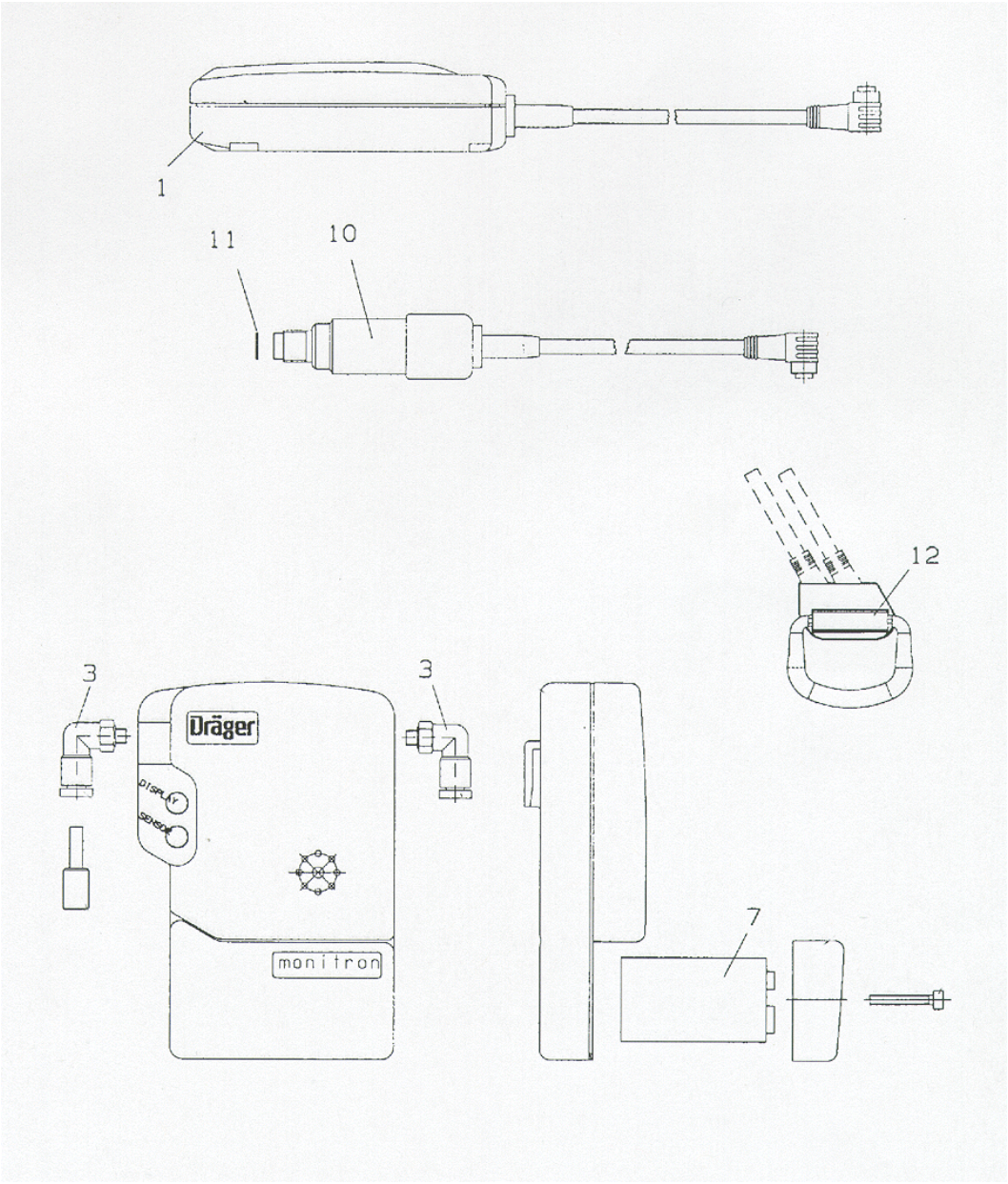


| 1 Cons. No. | 2 Designation | 1 Cons. No. | 2 Designation |
|---|---|---|---|
| 1 | Display Unit | 10 | Sensor Unit |
| 3 | Angle Connector | 11 | Copper Ring |
| 7 | 9 volt battery | 12 | Angled Sensor Connector |

## Refillable Cartridge

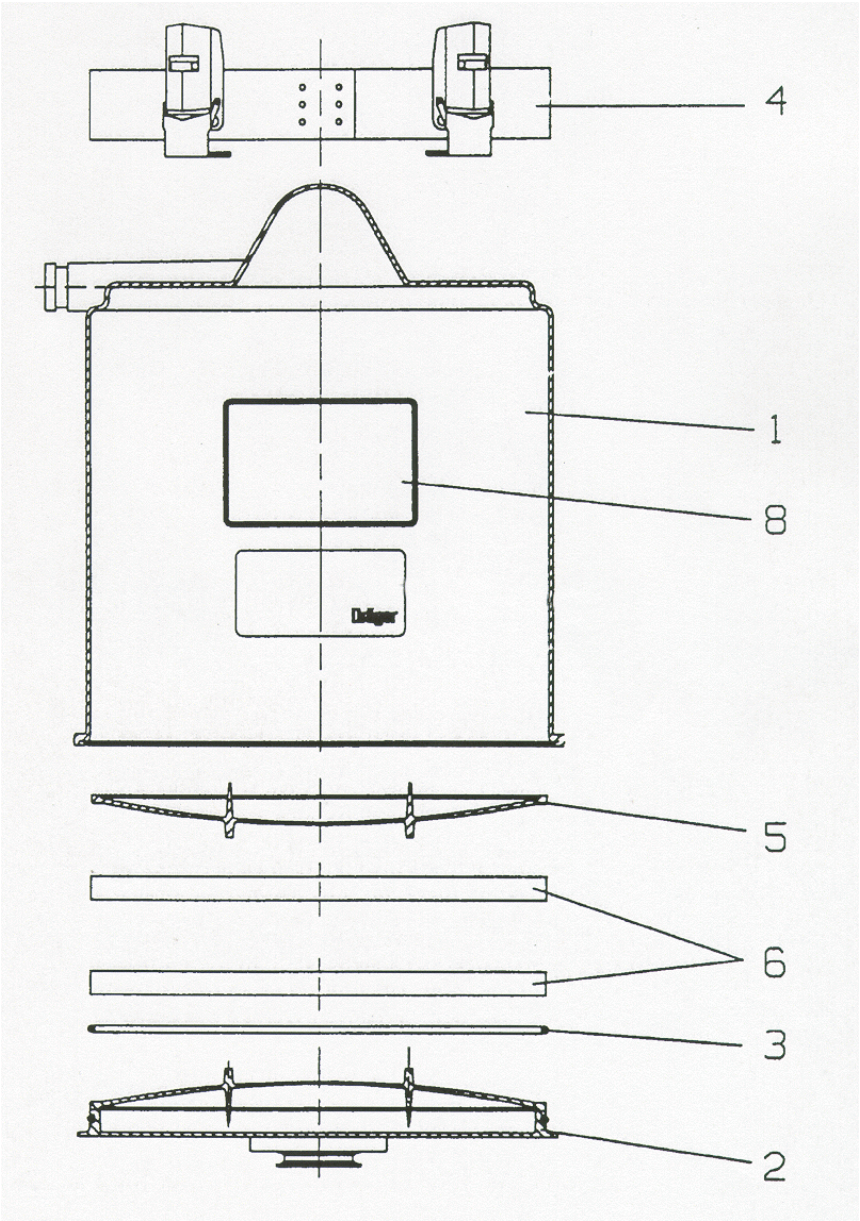


| 1 Cons. No. | 2 Designation | 1 Cons. No. | 2 Designation |
|---|---|---|---|
| 1-8 | Refillable Cartridge | 5 | Refillable Scrubber Screen |
| 2 | Lid | 6 | Filler Mats |
| 3 | Seal, Refillable Cartridge | 8 | NIOSH Approval Label |
| 4 | Strap with Tension Spring Hook | | |

## Panorama Nova EPDM Mask

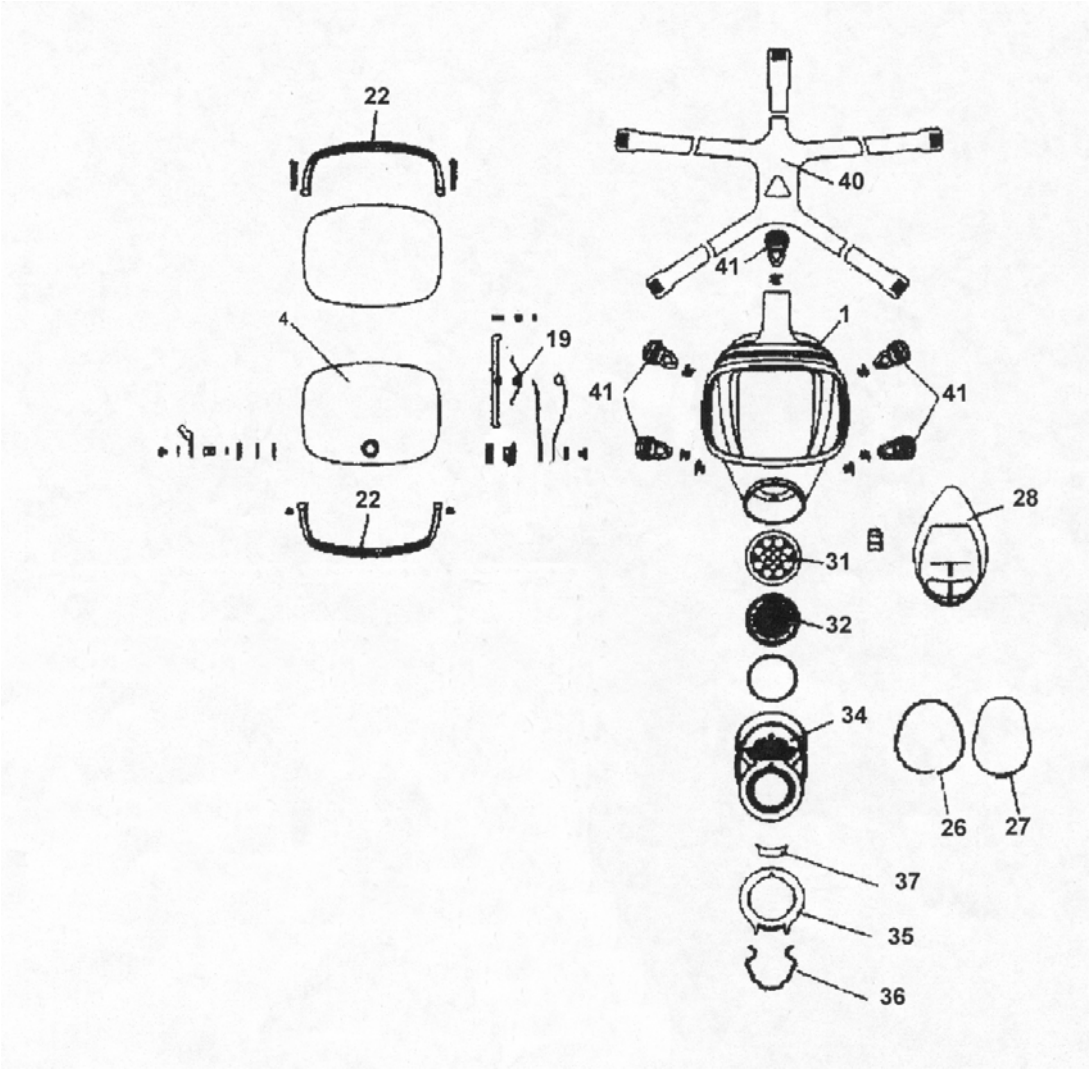


| 1 Cons. No. | 2 Designation | 1 Cons. No. | 2 Designation |
|---|---|---|---|
| 1 | Mask Body EPDM | 32 | Speech Diaphragm |
| 4 | Lens, Wiper, BG Mask | 34 | Connecting Piece |
| 19 | Tension Bar | 35 | Housing |
| 22 | Frame | 36 | Spring |
| 26 | Sliding Ring | 37 | Key |
| 27 | Clamp | 40 | Head Strap |
| 28 | Inner Mask, EPDM | 41 | Roller Buckle |
| 31 | Retainer | | |

## Oxygen Cylinder

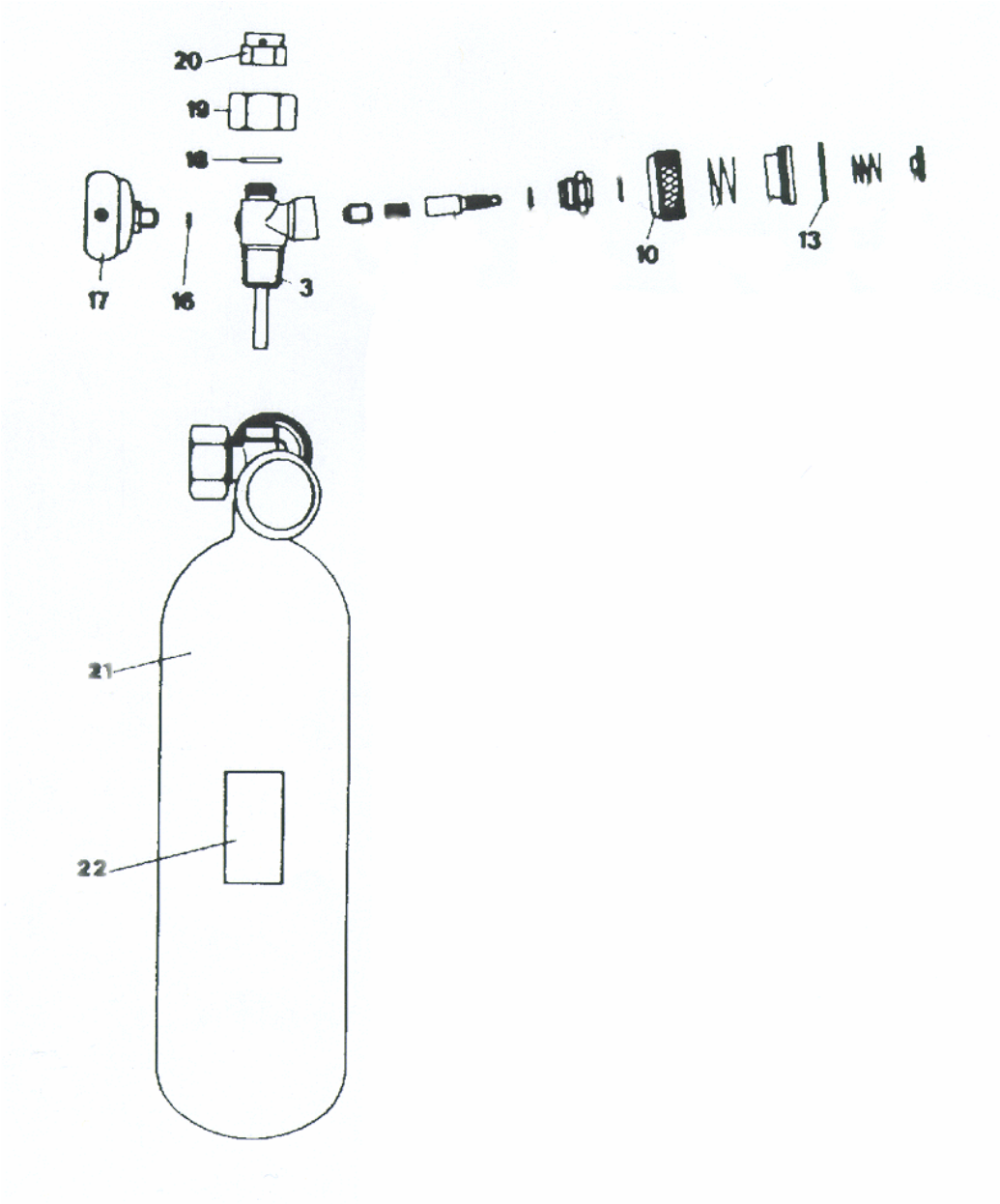


| 1<br>Cons. No. | 2<br>Designation | 1<br>Cons. No. | 2<br>Designation |
|---|---|---|---|
| 3 | Valve Housing | 18 | Lock Washer |
| 10 | Hand-wheel | 19 | Lock Nut |
| 13 | Safety Ring | 20 | Bursting Disc |
| 16 | Sealing Ring | 21 | Oxygen Cylinder |
| 17 | Manometer | 22 | Label |

# Test Kit

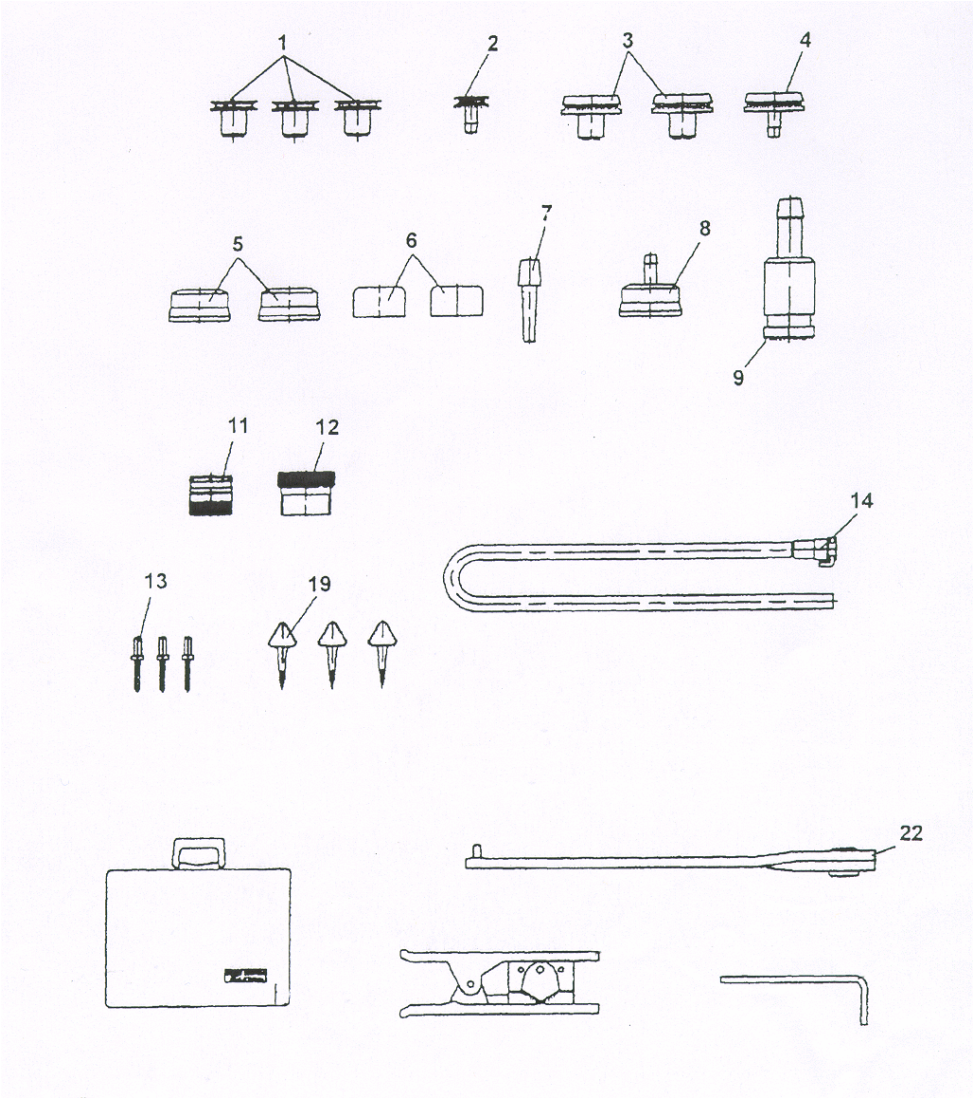


| 1 2<br>Cons. No. Designation | 1 2<br>Cons. No. Designation |
|---|---|
| 1 Plug For Breathing Bag<br>2 Nozzle For Breathing Bag<br>3 Sealing Plug (Corrugated Hose)<br>4 Test Socket for Corrugated Hose<br>5 Sealing Cap for Corrugated Hose<br>6 Sealing Cap<br>7 Testing Plug<br>8 Test Cap for Corrugated Hose<br>9 Test Connection for Control Valve | 11 Sealing Plug for Mask<br>12 Test Adaptor<br>13 Sealing Plug for Plug In Conn.<br>14 Test Hose/Metering Control<br>19 Sealing Ring Lifters<br>22 Spanner |