SECTION III

2011

BENCH

BIOPAK 240-R

RULES

Revised 3/23/2011

2011 BENCH BIOPAK 240-R CONTEST RULES

INDEX

Section III

Title Page

Rules Governing 2011 Bench BioPak 240R Contest and Interpretations of Discount Cards 1

Statements of Fact (Bench Contest) 10

Identification of Parts 17

RULES GOVERNING 2011 BENCH BIOPAK 240-R CONTEST AND INTERPRETATIONS OF DISCOUNT CARDS

1. Each participant must be under guard before the start of the Contest in a location assigned by the Chief Judge and must remain continuously under guard until time to work the problem. Participants under guard must be in a location where they will be unable to obtain any information concerning the problem to be worked. Any participant receiving information concerning a Contest problem prior to starting to work the problem will be disqualified by the Chief Judge and the Assistant Chief Judge. No person, except guards and Contest officials assigned to give the written examination, will be allowed to communicate with any participant under guard. Those who have performed will not be permitted to communicate with any participant awaiting their turn to perform.

2. Any indication of receiving unauthorized information during the working of the problem may result in disqualification as determined by the Chief Judge and the Assistant Chief Judge. No one except judges, Contest officials, and working participants will be permitted in the work area, unless special approval is given by the Chief Judge. Communication with bench participants, except for the judges, is prohibited. News media and photographers who wish to be in the working area must receive permission from the Director and be accompanied by a Contest official.

3. Any bench participant not in place and ready at the time specified will be disqualified from the Contest.

4. The bench participant will be provided with two BIOPAK 240-R apparatus (one disassembled, one assembled), a Test kit, a stopwatch, defogging solution, leak detector fluid and a tool kit. Only the tools and fluid provided will be used for testing and assembly of the apparatus. The work at the bench will consist of (1) a visual examination of a disassembled BIOPAK 240-R and the proper assembly and preparation for use in rescue work. This will include correcting any predetermined problem(s) so that the apparatus is in proper working order. Simulating defogging of the face piece lens will be done as part of the visual examination. This visual examination, correcting predetermined problem(s), and proper assembly can be done at any time allowed for working of the problem. (2) Test the assembled BIOPAK 240-R apparatus with a Test kit, and correct the predetermined problem(s) so that the apparatus is in proper working condition. Except for removing the face piece storage plug from the breathing hoses, the assembled BIOPAK 240-R

apparatus cannot be disassembled to look for problems, until the Constant Flow test is started. When testing is completed on the assembled BIOPAK 240-R apparatus, the hoses shall be removed from the tester, connected to the face piece, and the upper housing installed. This shall be done before the clock is stopped.

5. Spare parts to correct the predetermined problem(s) will be provided once the bench participant has specifically identified the problem. This will require the participant to point out the exact location of the deficiency. (Example: High pressure leak in circuit. Participant will identify the location of the leak.)

6. When an unplanned deficiency is encountered with the apparatus, the participant will be notified by the judges that the deficiency is not part of the problem. The judge will stop the clock, and any time used to correct the deficiency will not be charged to the working time. However, the process of verbal elimination shall not be used by the bench participant to find the predetermined problem(s). If it becomes obvious to the judges that this is occurring, the first offense will result in a warning, the second offense a discount, and the third offense could result in disqualification as determined by the Chief Judge. (Example: Participant verbally identifies a deficiency with every part of the face piece when only one predetermined problem exists.)

7. The bench participant will not be allowed to bring any materials, written information, or records to the work site.

8. Tests will be performed in sequence on the assembled BIOPAK 240-R apparatus as outlined in the rules using the standard test procedures with the Test kit as outlined in the BIOPAK Model 240-R Benchman Manual, B5-06-6000-15-0 REV-H.

9. A maximum of 30 minutes will be allowed to complete the problem. The bench judge will inform the participant when he has one minute remaining to work the problem. At the completion of the problem, the judge(s) and the participant will note the working time of the problem with the official timekeeper. Work done after the clock is stopped will not be recognized.

10. Manually abusing or intentionally over or under pressurizing the Tester or Apparatus substantially will be considered abusing the equipment. If the participant is observed abusing the Test kit, the first offense will result in a warning, the second offense will result in a discount, and the third offense could result in disqualification as determined by the Chief Judge.

A. Written Examination of Bench Participant

1. The written examination shall consist of 30 questions. Twenty questions for the written examination will be taken verbatim from the Statements of Fact which will be multiple choice with three choices and each blank shall represent a key word with no more than two consecutive blanks per statement. Ten questions will be taken verbatim from identification of parts. Thirty minutes will be allowed for the written examination. Answers will not be intentionally misspelled. "None of the above" shall not be used as one of the choices.

2. In special circumstances, individual bench participants may be given oral instead of written examinations by at least two judges. Requests for consideration shall be presented to the Director of the Contest at the time of registration.

3. Bench participants will be separated to the extent possible, and every effort will be made to prohibit discussion of questions and answers among the bench participants.

B. Miscellaneous

1. In the event of ties in the Bench Contest, the number of discounts at bench will be the first tie breaker; the number of discounts on written examination will be the second tie breaker; and the official working time at bench in minutes and seconds will be the third tie breaker.

2. The bench participant and trainer will report to a designated location to review and prepare protests within one hour of notification. Twenty minutes will be given to review and prepare written protests. All protests will be considered by the Chief Judge and his/her Assistant and their decision will be binding.

3. Bench participants must be bonafide employees of the mining industry or members of mine rescue teams designated to fulfill the requirements of 30 CFR Part 49. This does not exclude bench participants whose team is not participating at the National Contest.

4. Disputes with regard to the Bench Contest (except discounts), shall be immediately filed with the Director. Disputes filed shall be in writing and set forth incidents, times, names source of information and act complained against. Complainant shall remain accessible to the Director until the complaint is resolved. A decision by the Director shall be final.

Interpretations of Discount Sheet

A. Written Examination

1. For each incorrect statement_____1

B. Time

The time will be recorded in minutes and seconds.

C. Competition at Bench

1. Failure to verbally identify each test being conducted_____2

   Verbally identify each test being performed.

2. Failure to verbally identify each problem_____5

   Failure to verbally identify is also interpreted as failure to find the problem.

3. Failure to correct each problem_____5

   The bench participant shall properly correct the problem and continue with the proper tests. Once a bench participant finds a predetermined problem and does not correct it before continuing with the remaining tests, he/she shall receive a five point discount for continuing without correcting the problem and a pending five point discount for failing to correct the problem. If all of the remaining tests are properly conducted and passed and the participant returns to the uncorrected problem and corrects it, the pending five point discount will not be assessed. Should the participant continue on from this point and properly conduct all of the remaining tests again, he/she would also have the original five point discount for continuing tests removed.

4. Failure to conduct any visual examination or test on the BIOPAK 240-R, each test_____5

5. Failure to tighten connections properly during assembly or testing, each connection_____1

   All connections must be tightened on the apparatus and verbally identified as hand tight or wrench tight at the time the connection is tightened. Failure to verbally identify at the time the connection is being tightened will result in a one point discount for each.

   This includes:

   - Vent Valve Assembly - hand tight
   - Diaphragm Worm Gear Clamp – wrench tight
   - Flow Restrictor – wrench tight
   - Breathing Hose Worm Gear Clamps - wrench tight
   - Add and Constant Fittings – hand tight
   - Center Section Lid - hand tight
   - Center Section Push Pins - hand tight
   - Cylinder connections - hand tight
   - Adapter to Face piece - hand tight
   - Test fixture connections - hand tight

6. Failure to comply with rules not covered in discount sheet, each infraction_____2

   If the discount is not listed on the discount sheet, and if it is not covered under one of the approved rules of the Contest, do not improvise a discount to cover the suspected violation.

D. <u>Visuals</u>

1. Failure to conduct a proper visual examination of the Upper and Lower Housing/harness_____1

   The visual examination will include an examination of the harness assembly, lower housing, upper housing, seal, external gage, O_2 regulator and RMS. Failure to examine and verbally identify the examination will result in one discount for each. (Maximum 4 points)

2. Failure to conduct a proper visual examination of the center section assembly _____1

   The participant will verbally identify that the diaphragm is being examined for pliability and signs of deterioration. The participant will verbally identify that the o-ring and sealing rings are being examined for signs of deterioration. The participant will verbally identify that the Demand Valve Assembly, PCM and Moisture Pads are being examined for damage. Failure to examine and verbally identify the examination will result in one discount for each. (Maximum 4 points)

3. Failure to conduct a proper visual examination of the carbon dioxide scrubber_____1

   A proper examination includes a visual inspection for defects and damage of carbon dioxide scrubbers and gaskets. The participant will verbally confirm the expiration date has not expired. Failure to examine and verbally identify the examination will result in one discount for each. (Maximum 2 points)

4. Failure to conduct a proper visual examination of the center section lid assembly_____1

   The visual examination will include an examination for defects and damage of the assembly, o-ring seal (lubrication), ice canisters and coolant lids. Failure to examine and verbally identify the examination will result in one discount for each. (Maximum 2 points)

5. Failure to conduct a proper visual examination of the O_2 cylinder_____1

   A proper cylinder examination includes a visual inspection of the cylinder. The participant will verbally identify the cylinder pressure on the gage, the pressure rating on cylinder and the latest hydrostatic test date. Participant will inform the judge if the cylinder pressure is less than 1,500 PSI. Failure to examine and verbally identify the examination will result in one discount for each. (Maximum 3 points)

6. Failure to conduct a proper visual examination of the hoses_____1

The participant will verbally identify that the hoses are being inspected for pliability and signs of deterioration. Stretching or manipulating the hoses with a massaging action will be part of this examination. The participant will verbally identify that the sealing edges, including the gasket on the adapter assembly are being examined for signs of deterioration. (Install Arrows Up) Failure to examine and verbally identify the examination will result in one discount for each. (Maximum 2 points)

7. Failure to conduct a proper visual examination of the face piece_____1

The visual examination will include an examination of the head strap assembly, mask body, sealing edges, nose cup, the lens/anti-fog insert and speech diaphragms. Failure to examine and verbally identify the examination will result in one discount for each. (Maximum 4 points)

E. <u>Tester</u>

1. Failure to conduct a proper constant flow test_____2

Connect a test flow meter to the center section constant add feed line. Open O_2 cylinder valve and observe the test flow meter while holding the test flow meter in a level position. The flow reading on the flow meter should be between 1.6 and 2.4 Lpm. Participant will verbally state flow reading. Close the O_2 cylinder valve. Remove test flow meter. Reconnect constant add feed line to apparatus.

2. Failure to conduct a proper Demand Valve Functional test_____2

Remove the face piece storage plug from the front of the face piece adapter and install the leak test plug onto the face piece adapter. Attach one end of the test kit rubber tubing to the leak test plug and the other end to the input port of the test kit. Verify that the SCBA has no pressure contained within the breathing chamber by a zero reading on the test kit pressure gauge. Open the oxygen cylinder valve and listen for the sound of gas flowing into the breathing chamber. The sound of oxygen flowing into the breathing chamber shall cease within approximately 1-3 seconds.

3. Failure to conduct a proper Emergency Bypass Functional test_____2

Fill the SCBA with oxygen by depressing the emergency bypass one time for no more than 1-2 seconds. The sound of gas flowing into the center section shall be observed. The gas flow shall cease when the bypass valve button is released.

4. Failure to conduct a proper Vent Valve Functional test_____2

Complete filling the SCBA with oxygen by depressing the emergency bypass one time for an additional 1 second, if needed. Observe the test kit pressure gauge; the reading will be at or below 2 inches of water column. Verbally state final reading. Close O_2 cylinder valve. Vent the pressure from the SCBA and remove rubber tubing and leak test plug.

5. Failure to conduct a proper low pressure leak test_____2

Install the leak test plug onto the face piece adapter and attach one end of the test kit rubber tubing to the leak test plug and the other end to the input port of the test kit. Verify that the SCBA has no pressure contained within the breathing chamber by a zero reading on the test kit pressure gauge. Insert two test keys into the keyholes in the back of the lower housing. Open the oxygen cylinder valve to pressurize the apparatus and tester. Gently depress the bypass valve to increase the reading to approximately 4 to 5 inches water column. Close the oxygen valve and fully depress the bypass valve. Immediately use the test kit bleed valve to adjust the SCBA pressure to 6-8 inches water column pressure. Allow the SCBA's pressure to stabilize at 6-8 inches water column of pressure. After one minute, the pressure gauge of the test kit shall indicate no less than 0.2-inches water column pressure below the stabilized starting pressure. Vent the pressure from the SCBA and remove rubber tubing, leak test plug, and keys. Replace face piece adapter plug.

6. Failure to conduct a proper RMS Gauge and TRIM test_____2

While looking at the gauge and TRIM, open the oxygen cylinder valve and listen for the alarm test and observe the gauge and TRIM color sequence. The gauge will reach full pressure (approximately 60

seconds). The alarm and TRIM will go through a startup self-check: Alarm, Red, Green, Blue light sequence, then a flashing green light. Check for stabilization of alarm lights. Verify that the oxygen cylinder pressure gauge and the RMS gauge are within +/- 10%. Verbally state final reading.

7. Failure to conduct a proper High Pressure Leak test_____2

   Inspect each plumbing connection and Flow Restrictor with Lec-Tec for a minimum of 60 seconds.

8. Failure to conduct a proper Low Pressure Alarm Functional test_____2

   Turn off the oxygen cylinder and allow the BioPak to slowly reduce system pressure. The low alarm must activate between 650-1000 psig and is indicated by a flashing red light and audible alarm. (Verbally state reading) The RMS will automatically power down once the system pressure is dropped below 25 psig. Vent the SCBA of pressure and remove test equipment.

STATEMENTS OF FACT
BENCH BIOPAK 240-R CONTEST

1. Use only exact replacement parts in the configuration as specified by the manufacturer.

2. The battery is to be changed in fresh air only.

3. MSHA approved for use with one of the following 9-Volt batteries only:

   Eveready
   Panasonic
   Rayovac
   Duracell

4. Never substitute, modify, add or omit parts.

5. Prior to using the BioPak 240 Revolution it must be determined that the user is medically fit.

6. Always handle oxygen cylinders with care to prevent damage.

7. Do not open the cylinder valve in the presence of open flame, sparks or high radiant heat.

8. Oxygen will enhance the combustion of other materials so that materials that normally will not burn in air may burn in oxygen-rich atmospheres; and, materials that do burn in air will burn more vigorously and at a higher temperature in oxygen-rich atmospheres.

9. Oxygen will not cause materials to ignite without the presence of an ignition source.

10. The use of an SCBA will add to the workload and stress of the user.

11. The BioPak 240 Revolution is suitable for respiratory protection during entry into and escape from oxygen deficient atmospheres with a temperature range of 5 degree F (-15C) to 110 degree F (43C).

12. The BioPak 240 Revolution is approved when the oxygen cylinder is fully charged with compressed medical or aviation grade oxygen at 3000 psi.

13. Allow the oxygen cylinder to cool after filling to determine the correct pressure.

14. A foreign gas may cause cylinder corrosion.

15. Always check for a current hydrostatic test date.

16. DOT requires carbon fiber wrapped aluminum cylinders be tested by an approved facility on a 5-year cycle from the date of manufacture.

17. An unapproved facepiece will compromise the protection provided to the user by the SCBA.

18. A good facepiece seal is important to achieving full protection and proper SCBA duration.

19. Users should never wear the BioPak if they have any facial hair.-

20. Replace the battery when the low battery alarm has activated, after 200 hours of use or every 6 months whichever comes first.

21. The connectors of the monitoring device may only be connected to a Biomarine BioPak 240R breathing Apparatus oxygen regulator, manifold block and breathing chamber.

22. The fiber optic cable may only be connected to the BioPak 240R remote gauge assembly.

23. Turn-Around maintenance procedures should be performed as soon as possible after each use of the SCBA.

24. If the lower housing is being washed, always leave the cylinder securely attached to the regulator so that the area remains clean, dry and free of contamination.

25. The usual scrubber consists of limestone and a plastic core. Do not reuse previously used CO_2 absorbent cartridges or the rubber gaskets.

26. DO NOT submerge the Alarm Module during turn-around maintenance.

27. The RMS Module IS NOT watertight with the TRIM light pipe connector or the battery door removed.

28. The lower housing should be cleaned with the cylinder securely attached to the regulator.

29. If the cylinder is removed for washing you Must Attach the Regulator Wash Cover provided in the test kit to seal off the regulator from contamination while washing the lower housing.

30. The facepiece should be sprayed with Multi-Wash "Disinfectant and rinsed with clean water.

31. Allow all components to remain wetted by the cleaning solution a minimum of ten minutes.

32. Thoroughly rinse all components several times with clean water to remove cleaning solution residue.

33. C.O.P.D. could limit or prevent the use of the BioPak 240 Revolution.

34. Freeze the ice canisters for a minimum of 8 hours before use at a maximum temperature of 10 degrees F (-12 C).

35. Apply anti-fog solution or water to both halves of the chamois before every use to ensure mask lens do not scratch.

36. Failure to install the Phase Change Material Canister into the center section prior to use will result in increased breathing gas temperature.

37. Installing wet sponges and closing up the SCBA may lead to mold growth during extended storage periods.

38. To prevent mold growth, install the sponges in a totally dry state and moisten sponges just prior to SCBA use.

39. Do not expose opened CO_2 scrubber cartridges to ambient air for more than 20 minutes.

40. Excess exposure of ambient air with the CO_2 scrubber cartridges can adversely affect the optimal absorption process and increase the potential for CO_2 entering the breathing loop.

41. Install each CO_2 canister into the SCBA so that the red end cap is visible on the top side of the canister.

42. The hoses and facepiece adapter MUST be installed with the breathing gas directional arrows facing UP.

43. To get the most accurate flow meter reading you must have a minimum of 1500 psi (104 bar) in the cylinder.

44. The use of non-approved flow meters will result in inaccurate flow readings.

45. Over pressurization of the SCBA with the test keys installed beyond 8" of water column could damage the vent valve and diaphragm.

46. The battery has completed its battery check and has battery life for a full 4 hour mission if you receive a green flashing light.

47. A low battery alarm is indicated by a Red, Green, Blue light sequence followed by a short alarm chirp any time the battery will not complete a four-hour mission.

48. The oxygen cylinder pressure gauge and the RMS gauge pressure readings shall match within +/- 10%.

49. A properly stored SCBA will be one that has been thoroughly cleaned, dried, tested and all items on the Turn-Around Maintenance Tag properly documented.

50. Any SCBA that fails testing must be clearly identified or "Tagged-Out" of service.

51. If a quick Turn-Around Maintenance has been performed, the SCBA will function and is designed to work wet.

52. In addition to normal Turn-Around Maintenance, the SCBA shall be visually inspected and high-pressure tested on a monthly basis if the SCBA is in constant use once a month or placed into long-term storage.

53. Constant use is defined as being in use at least once a month

54. The RMS will automatically power down once the system pressure has dropped below 25 psig.

55. NEVER Pry an o-ring from its seat with a screwdriver. Carefully remove the o-ring by hand or with the pick tool provided in the test kit.

56. Cristo-Lube and Dow-111 are the only o-ring lubricants that shall be utilized on the SCBA components.

57. NEVER Use Dow 111 on any o-ring seal that comes in contact with high-pressure oxygen.

58. There are no user serviceable components on the oxygen cylinder assembly.

59. Other than replacement of the battery, there are no user serviceable components in the RMS gauge, alarm module or TRIM.

60. The RMS alarm module is sealed to prevent entry of moisture and to provide immunity against RFI/EMF interference.

61. In the event the SCBA fails flow testing during Turn-Around or Long-term Maintenance the flow restrictor is most likely clogged and will require replacement.

62. Not achieving full 4-hour duration of BioPak during use could be caused by poor or leaking facepiece seal.

63. Not achieving full 4-hour duration of BioPak during use could be caused by the oxygen cylinder being opened prior to donning facepiece.

64. Not achieving full 4-hour duration of BioPak during use could be caused by the bypass valve over used or utilized to attempt to clear facepiece lens.

65. Not achieving full 4-hour duration of BioPak during use could be caused by the user being under heavy workloads or extreme ambient conditions.

66. Not achieving full 4-hour duration of BioPak during use could be caused by a leak in the BioPak.

67. Not achieving full 4-hour duration of BioPak during use could be caused by a pressure Regulator Failure.

68. High breathing resistance during exhalation could be caused by the facepiece exhalation valve sticking closed.

69. High breathing resistance during exhalation could be caused by diaphragm springs in breathing chamber not properly seated or damaged.

70. High breathing resistance during exhalation could be caused by vent valve in breathing chamber not opening properly.

71. High breathing resistance during inhalation could be caused by the facepiece inhalation check valve sticking closed.

72. High breathing resistance during inhalation could be caused by the diaphragm springs in breathing chamber are missing or damaged.

73. High breathing resistance during inhalation could be caused by the demand valve in breathing chamber has failed.

74. Alarm indications of remaining service time not functioning correctly could be caused by the monitoring system battery has expired.

75. Breathing gas uncomfortably warm during use could be caused by the frozen ice canisters have not been installed into the coolant shells.

76. BioPak weight, ready to use is 34 pounds.

77. BioPak tidal volume is over 6 liters.

78. BioPak Carbon Dioxide Scrubber is Dual, single use Calcium Hydroxide cartridges, non-dusting, non-channeling, non-hazardous.

79. Use only exact replacement parts in the configuration as specified by Biomarine.

80. Do not allow oil, grease or other foreign materials to come in contact with cylinder, cylinder valve or cylinder pressure regulator to prevent possible ignition.

81. A clean-shaven user will significantly increase his chances of achieving a good facepiece seal.

82. Do not change battery in hazardous area.

83. The low oxygen alarm must activate between 650-750 psig and is indicated by a flashing red light and audible alarm.

84. The CO_2 Scrubber Gasket should be replaced after 1 use.

85. The CO_2 Scrubber should be replaced after 1 use.

86. The facepiece Anti-Fog Lens should be replaced after approximately 20 uses.

87. The Oxygen Seal Washer should be replaced as needed.

88. The Center Section Lid O-Ring should be replaced as needed.

89. In the event the SCBA fails flow testing during Turn-Around or Long-term Maintenance the flow restrictor is most likely clogged and will require replacement.

90. Mask fogging during use could be caused by the Anti-fog lens insert missing or damaged.

91. Mask fogging during use could be caused by Anti-fog agent not applied or applied incorrectly.

92. Breathing gas uncomfortably warm during use could be caused by the PCM canister.

93. Facepiece failing positive and/or negative testing during user donning could be caused by the inhalation and/or exhalation check valves missing in the facepiece.

94. Facepiece failing positive and/or negative testing during user donning could be caused by the inhalation and/or exhalation check valves damaged in the facepiece.

95. Facepiece failing positive and/or negative testing during user donning could be caused by poor facepiece fit.

96. A Pacemaker or other Cardiac Condition could limit or prevent the use of the BioPak 240 Revolution.

97. Breathing difficulties could limit or prevent the use of the BioPak 240 Revolution.

98. Claustrophobia or anxiety when wearing a SCBA could limit or prevent the use of the BioPak 240 Revolution.

99. X-Ray evidence of Pneumonia could limit or prevent the use of the BioPak 240 Revolution.

100. Epilepsy-Grand Mal or Petit Mal could limit or prevent the use of the BioPak 240 Revolution.

BioPak 240 Revolution Complete

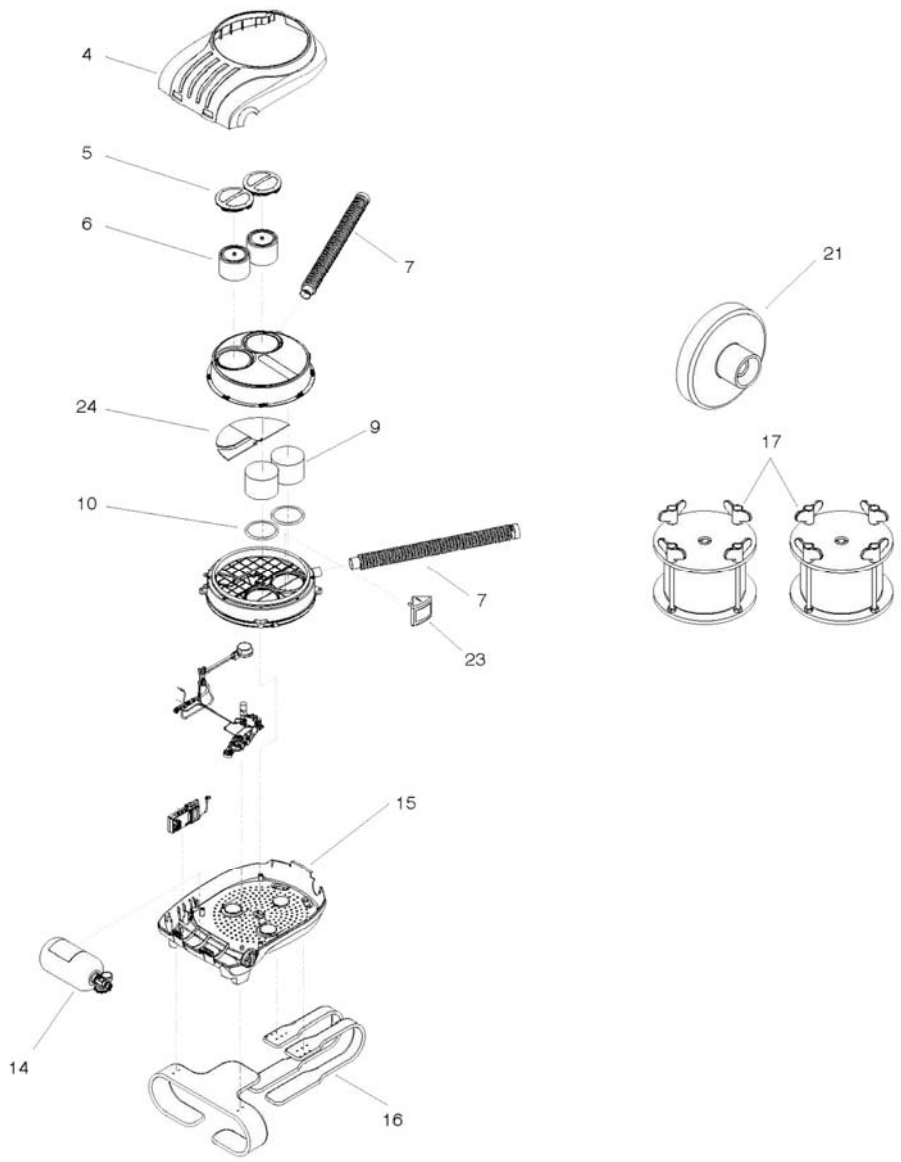

1 Cons. No.	2 Designation	1 Cons. No.	2 Designation
4	Upper Housing Assembly	16	Harness Assembly
5	Coolant Lid	17	Ice Canister Freeze Form
6	Ice Canister	21	Facepiece Storage Plug
7	Breathing Hose	23	(PCM) Heat Exchanger
14	O_2 Cylinder	24	Moisture Absorbent Pad Set
15	Lower Housing Assembly		

Lower Housing Assembly

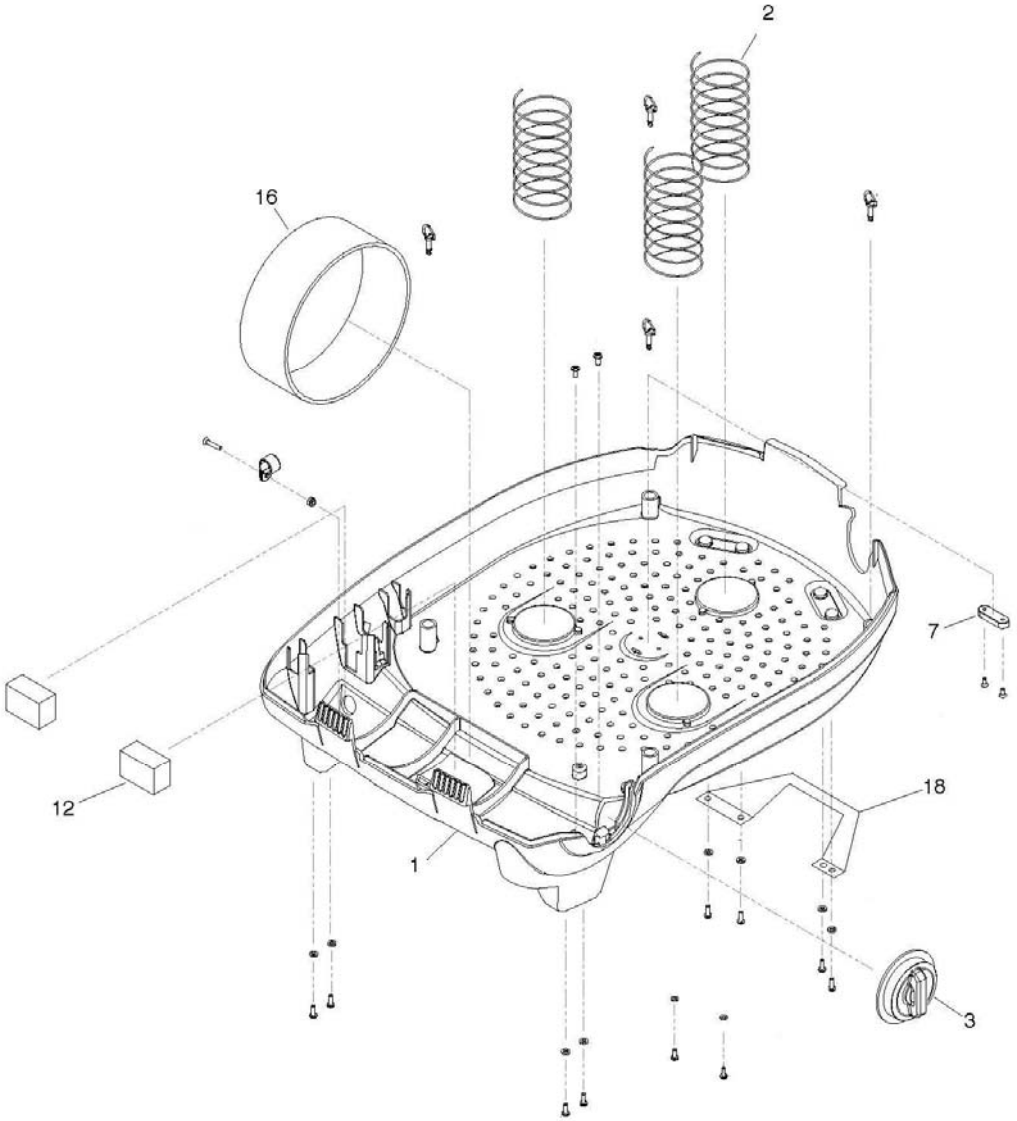

1 Cons. No.	2 Designation	1 Cons. No.	2 Designation
1	Lower Housing Shell	12	Latch Foam Pad
2	Diaphragm Springs	16	Oxygen Cylinder Hold-Down Strap
3	External Oxygen Knob	18	Carrying Handle
7	Vent Spacer		

Pneumatic Assembly

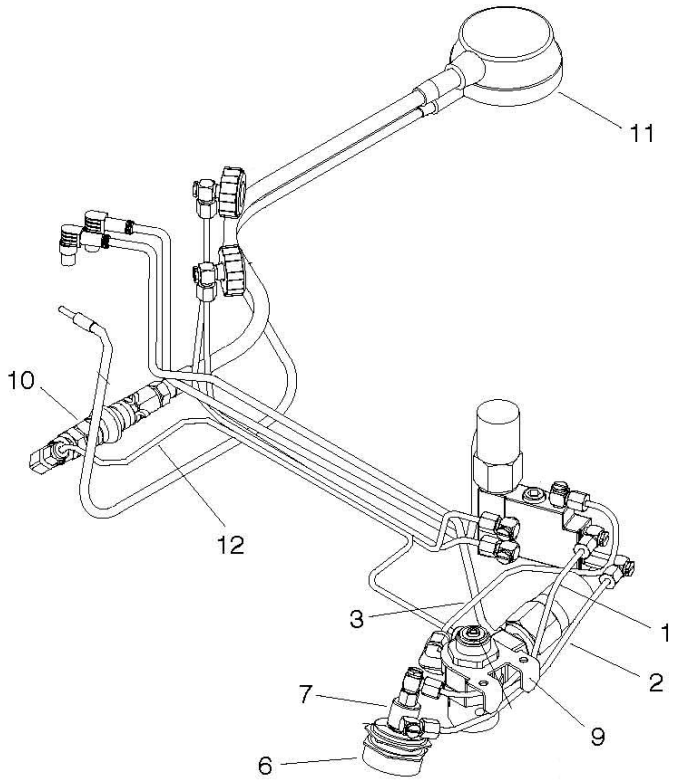

1	2	1	2
Cons. No.	Designation	Cons. No.	Designation
1	Bypass Feed Tube	9	Oxygen Regulator Assembly
2	Bypass Return Tube	10	Remote Gauge Shut Off Assembly
3	Oxygen Feed Tube	11	Remote Gauge Assembly
6	Bypass Valve Push Button	12	Remote Gauge Feed Tube Assembly
7	Bypass Valve		

Manifold Assembly

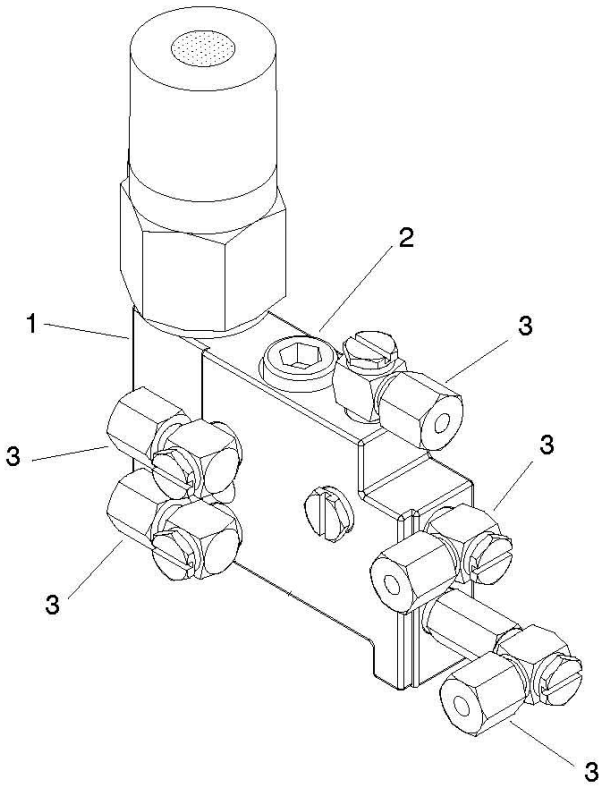

1 Cons. No.	2 Designation	1 Cons. No.	2 Designation
1	Manifold Block w/ Pressure Switch	3	Swivel Elbow Fitting
2	Constant Add Flow Restrictor Assembly		

Center Section Assembly

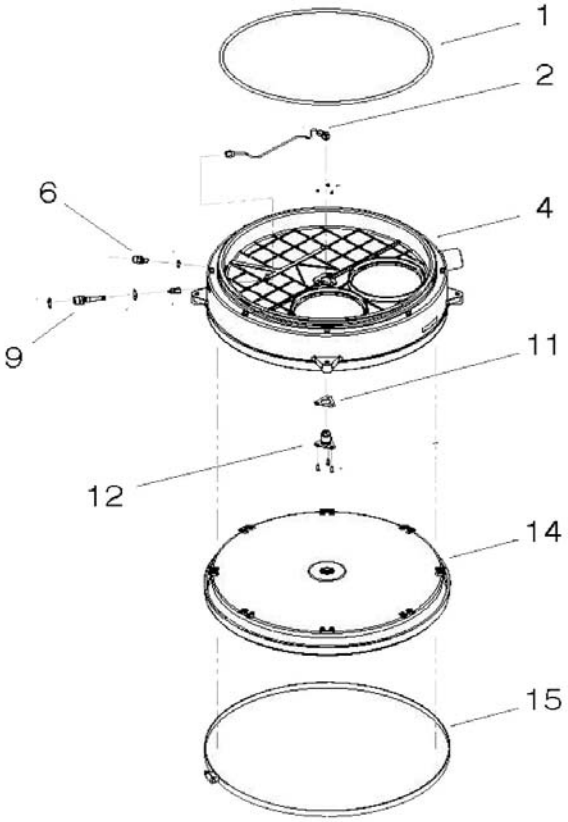

1	2	1	2
Cons. No.	Designation	Cons. No.	Designation
1	Lid O-Ring	11	Demand Valve Gasket
2	Demand Feed Tube	12	Demand Valve Assembly
4	Center Section Body Assembly	14	Flexible Diaphragm
6	Constant Add Fitting	15	Diaphragm Clamp
9	Demand Add Fitting		

Center Section Lid Assembly

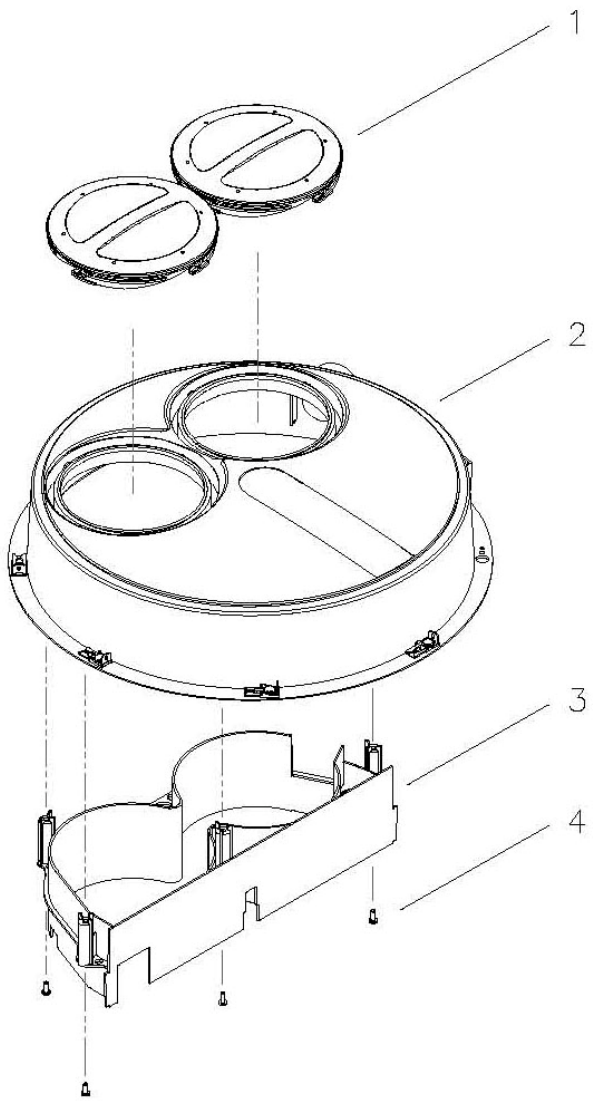

1 Cons. No.	2 Designation	1 Cons. No.	2 Designation
1	Coolant Lid	3	Flow Baffle
2	Center Section Lid	4	Self-Tapping Screws

Diaphragm Assembly

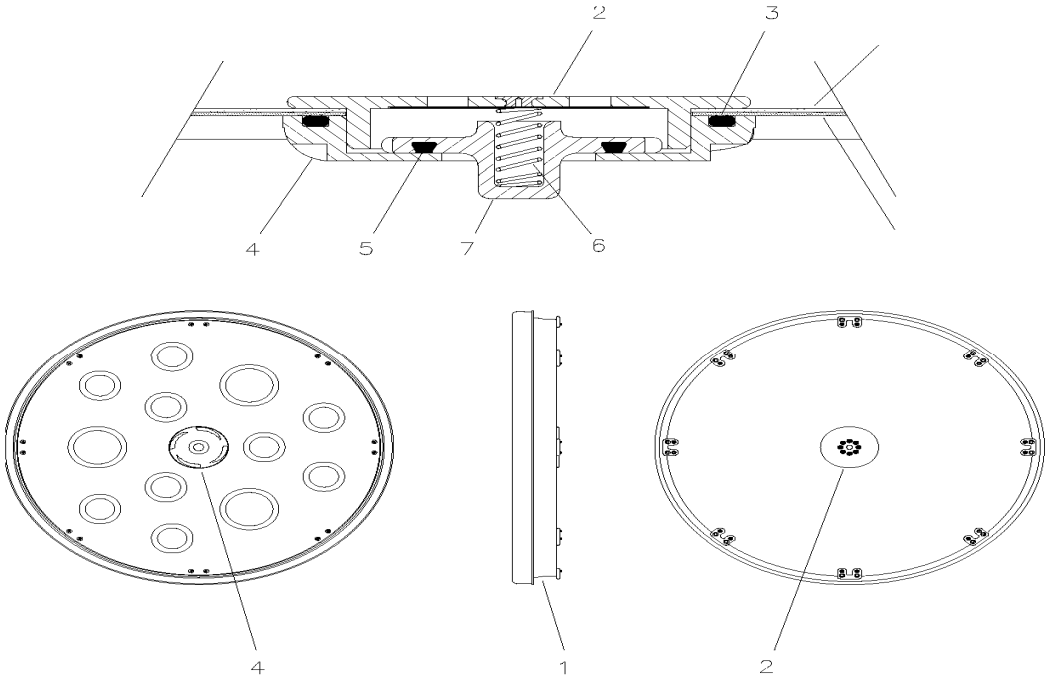

1 2 Cons. No. Designation	1 2 Cons. No. Designation
1 Flexible Diaphragm 2 Vent Cap 3 Vent Body O-Ring 4 Vent Body	5 Vent Seat O-Ring 6 Vent Valve Spring 7 Vent Valve Seat

Breathing Hose

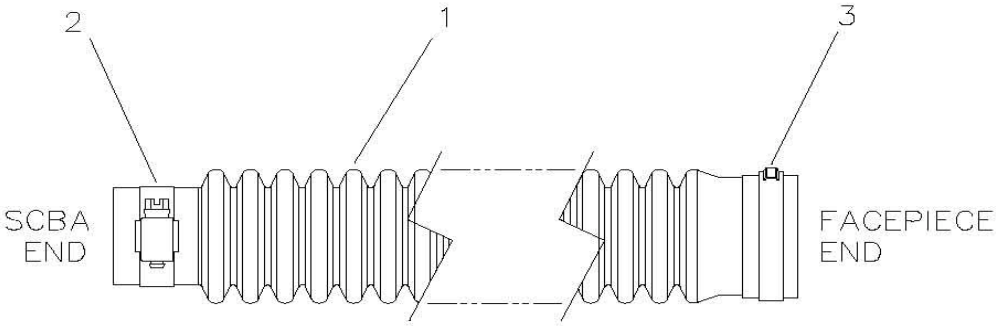

1 Cons. No.	2 Designation	1 Cons. No.	2 Designation
1	Breathing Hose	3	Stepless Ear Clamp
2	Worm Gear Hose Clamp		

Ice Canister Freeze Form

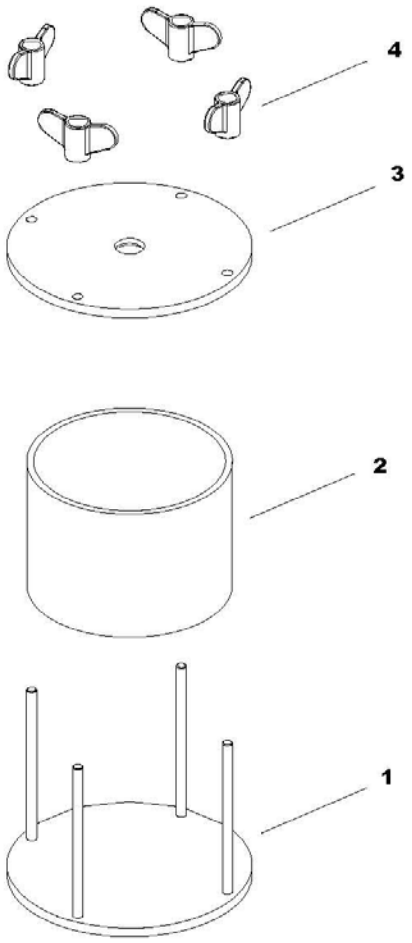

1 Cons. No.	2 Designation	1 Cons. No.	2 Designation
1	Base Assembly	3	Top Plate
2	Freeze Tube	4	Wing Nut

Oxygen Cylinder Assembly

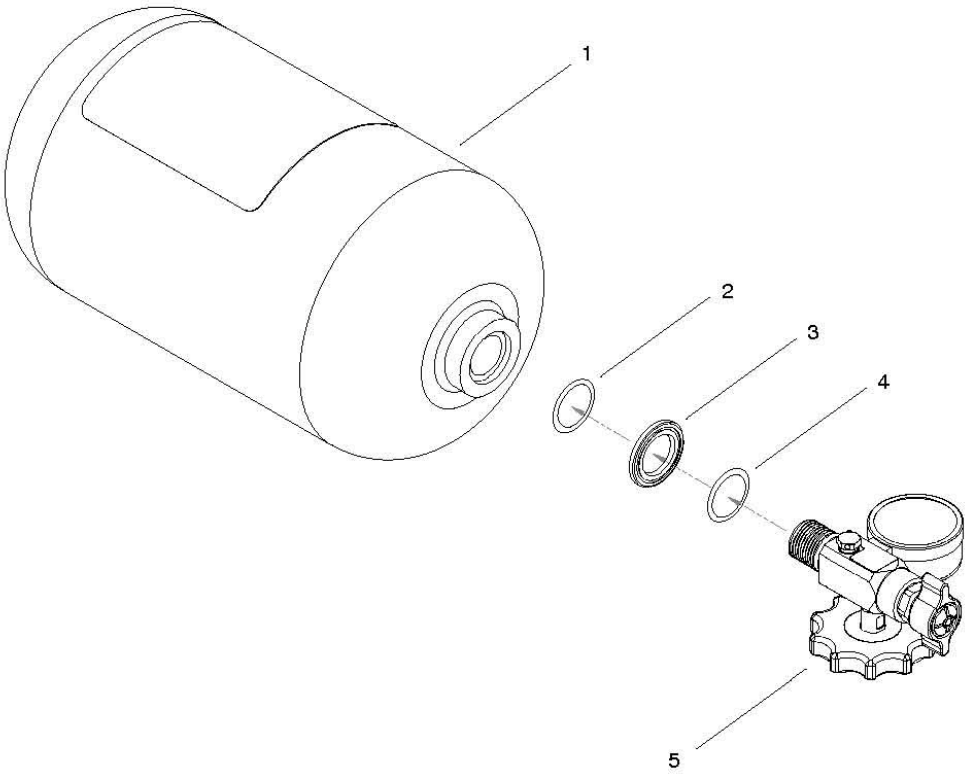

1 Cons. No.	2 Designation	1 Cons. No.	2 Designation
1	Green Cylinder	4	Interior O-Ring
2	Exterior O-Ring	5	Valve Assembly
3	Valve Collar		

RMS Monitoring System

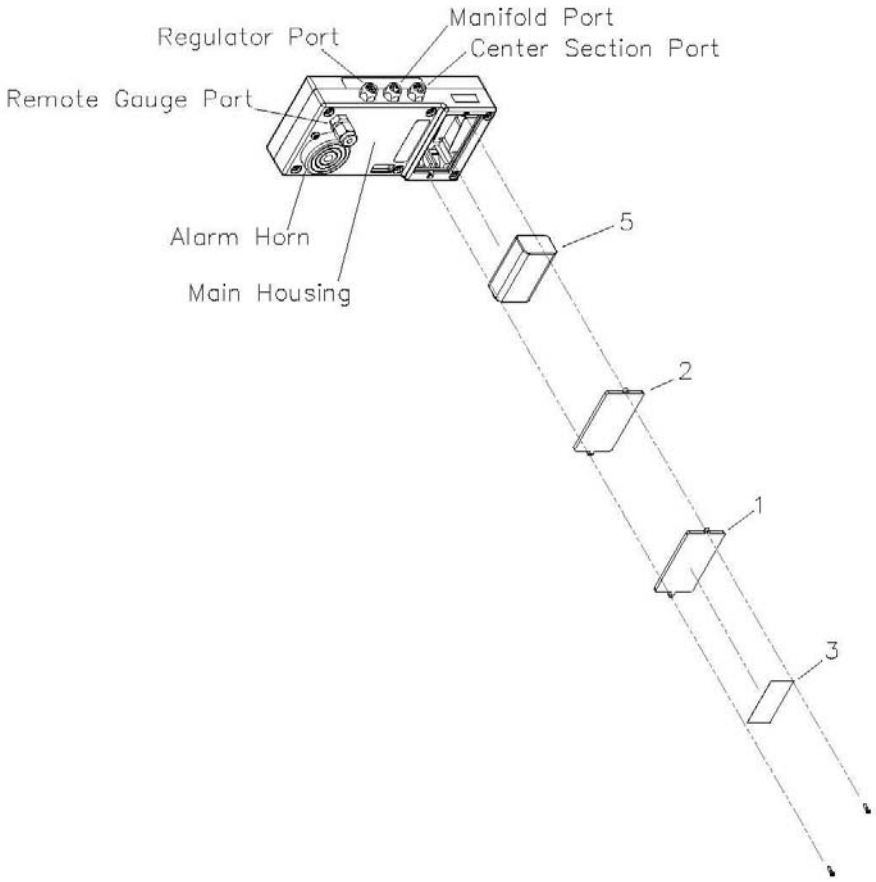

1 2 Cons. No. Designation	1 2 Cons. No. Designation
1 Battery Door 2 Battery Door Gasket	3 Battery Door Warning Label 5 9Vdc Battery

Facepiece Assembly

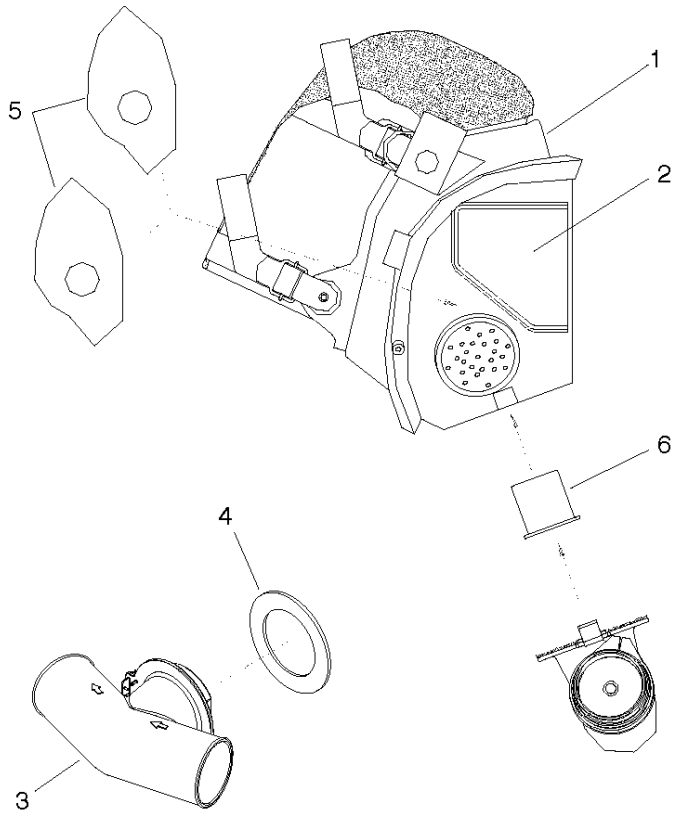

1 Cons. No.	2 Designation	1 Cons. No.	2 Designation
1	Facepiece Complete	4	Facepiece Adapter Gasket
2	Anti-Fog Lens Insert	5	Nose Cup Insert
3	Facepiece Adapter Assembly	6	Interface Tube

Tool Kit

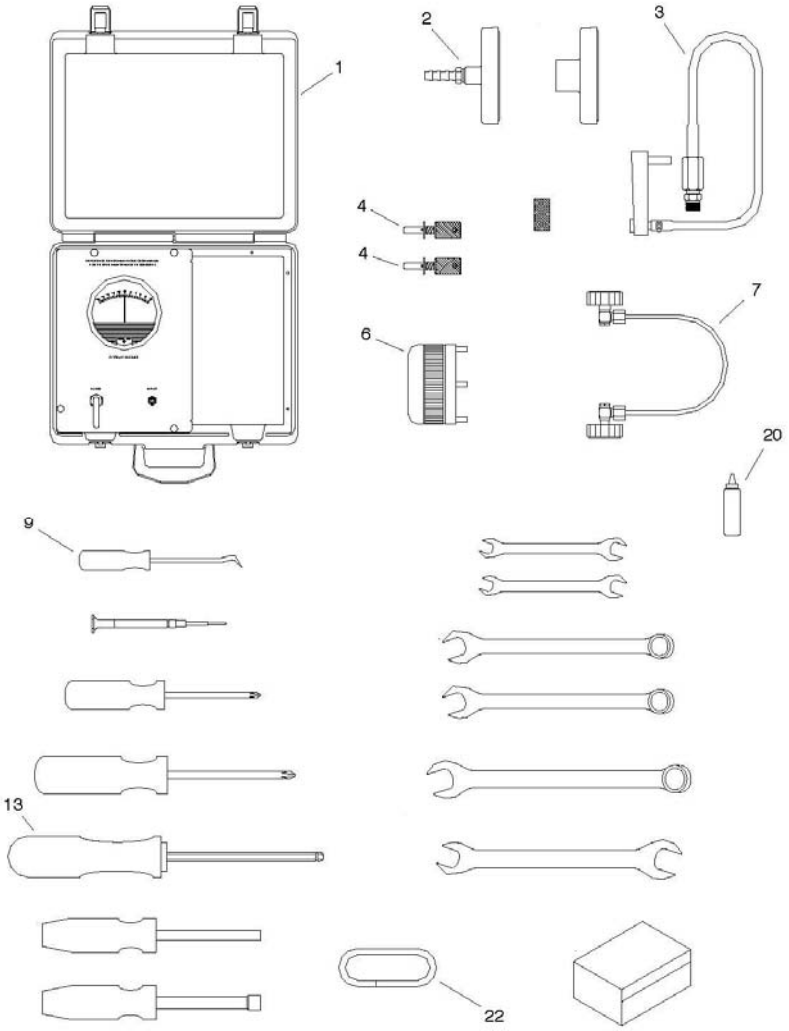

1 Cons. No.	2 Designation	1 Cons. No.	2 Designation
1	Case Assembly	7	Center Section Pneumatic Plug
2	Leak Check Adapter Fitting	9	Combination Pick Tool
3	Flow Test Fixture	13	1/4 - Inch Hex Driver
4	Test Key	20	Leak Detection Fluid
6	Vent Valve Wrench	22	3/8 – Inch OD Rubber Tubing