# SECTION V

# 2011

# BENCH

# BIOPAK 240-S

# RULES

**2011 BENCH BIOPAK 240-S CONTEST RULES**

**INDEX**

Section V

Title Page

Rules Governing 2011 Bench BioPak 240-S Contest and Interpretations of Discount Cards ..... 1

Statements of Fact (Bench Contest) ..... 9

Identification of Parts ..... 16

**RULES GOVERNING 2011 BENCH BIOPAK 240-S CONTEST AND INTERPRETATIONS OF DISCOUNT CARDS**

1. Each participant must be under guard before the start of the Contest in a location assigned by the Chief Judge and must remain continuously under guard until time to work the problem. Participants under guard must be in a location where they will be unable to obtain any information concerning the problem to be worked. Any participant receiving information concerning a Contest problem prior to starting to work the problem will be disqualified by the Chief Judge and the Assistant Chief Judge. No person, except guards and Contest officials assigned to give the written examination, will be allowed to communicate with any participant under guard. Those who have performed will not be permitted to communicate with any participant awaiting their turn to perform.

2. Any indication of receiving unauthorized information during the working of the problem may result in disqualification as determined by the Chief Judge and the Assistant Chief Judge. No one except judges, Contest officials, and working participants will be permitted in the work area, unless special approval is given by the Chief Judge. Communication with bench participants, except for the judges, is prohibited. News media and photographers who wish to be in the working area must receive permission from the Director and be accompanied by a Contest official.

3. Any bench participant not in place and ready at the time specified will be disqualified from the Contest.

4. The bench participant will be provided with two BIOPAK 240-S apparatus (one disassembled, one assembled), a Test kit, a stopwatch, defogging solution, leak detector fluid and a tool kit. Only the tools and fluid provided will be used for testing and assembly of the apparatus. The work at the bench will consist of (1) a visual examination of a disassembled BIOPAK 240-S and the proper assembly and preparation for use in rescue work. This will include correcting any predetermined problem(s) so that the apparatus is in proper working order. Simulating defogging of the Facepiece lens will be done as part of the visual examination. This visual examination, correcting predetermined problem(s), and proper assembly can be done at any time allowed for working of the problem. (2) Test the assembled BIOPAK 240-S apparatus with a Test kit, and correct the predetermined problem(s) so that the apparatus is in proper working condition. Except for removing the

coupler from the breathing hoses, the assembled BIOPAK 240-S apparatus cannot be disassembled to look for problems, until the High pressure leak test is started. When testing is completed on the assembled BIOPAK 240-S apparatus, the hoses shall be removed from the tester, connected to the Facepiece, and the upper housing installed. This shall be done before the clock is stopped.

5. Spare parts to correct the predetermined problem(s) will be provided once the bench participant has specifically identified the problem. This will require the participant to point out the exact location of the deficiency. (Example: High pressure leak in circuit. Participant will identify the location of the leak.)

6. When an unplanned deficiency is encountered with the apparatus, the participant will be notified by the judges that the deficiency is not part of the problem. The judge will stop the clock, and any time used to correct the deficiency will not be charged to the working time. However, the process of verbal elimination shall not be used by the bench participant to find the predetermined problem(s). If it becomes obvious to the judges that this is occurring, the first offense will result in a warning, the second offense a discount, and the third offense could result in disqualification as determined by the Chief Judge. (Example: Participant verbally identifies a deficiency with every part of the Facepiece when only one predetermined problem exists.)

7. The bench participant will not be allowed to bring any materials, written information, or records to the work site. ~~The participant will not have to create a test record; however, he or she may write the test from memory on paper that will be provided for that purpose after the official working time has started.~~

8. Tests will be performed in sequence on the assembled BIOPAK 240-S apparatus using the standard test procedures with the Test kit as outlined in the BIOPAK Model 240-S Benchman Manual, A46D030, Revision: L.

9. A maximum of 30 minutes will be allowed to complete the problem. The bench judge will inform the participant when he has one minute remaining to work the problem. At the completion of the problem, the judge(s) and the participant will note the working time of the problem with the official timekeeper. Work done after the clock is stopped will not be recognized.

10. Manually abusing or intentionally over or under pressurizing the Balloon Leak Test Fixture substantially will be considered abusing the equipment. If the participant is observed abusing the Test kit, the first offense will result in a warning, the second offense will result in a discount, and the third offense could result in disqualification as determined by the Chief Judge.

A. Written Examination of Bench Participant

1. The written examination shall consist of 30 questions. Twenty questions for the written examination will be taken verbatim from the Statements of Fact which will be multiple choice with three choices and each blank shall represent a key word with no more than two consecutive blanks per statement. Ten questions will be taken verbatim from identification of parts. Thirty minutes will be allowed for the written examination. **Answers will not be intentionally misspelled. "None of the above" shall not be used as one of the choices.**

2. In special circumstances, individual bench participants may be given oral instead of written examinations by at least two judges. Requests for consideration shall be presented to the Director of the Contest at the time of registration.

3. Bench participants will be separated to the extent possible, and every effort will be made to prohibit discussion of questions and answers among the bench participants.

B. Miscellaneous

1. In the event of ties in the Bench Contest, the number of discounts at bench will be the first tie breaker; the number of discounts on written examination will be the second tie breaker; and the official working time at bench in minutes and seconds will be the third tie breaker.

2. The bench participant and trainer will report to a designated location to review and prepare protests within one hour of notification. Twenty minutes will be given to review and prepare written protests. All protests will be considered by the Chief Judge and his/her Assistant and their decision will be binding.

3. Bench participants must be bonafide employees of the mining industry or members of mine rescue teams designated to fulfill the requirements of 30 CFR Part 49. This does not exclude bench participants whose team is not participating at the National Contest.

4. Disputes with regard to the Bench Contest (except discounts), shall be immediately filed with the Director. Disputes filed shall be in writing and set forth incidents, times, names source of information and act complained against. Complainant shall remain accessible to the Director until the complaint is resolved. A decision by the Director shall be final.

## Interpretations of Discount Sheet

A. Written Examination

1. For each incorrect statement_____1

B. Time

The time will be recorded in minutes and seconds.

C. Competition at Bench

1. Failure to verbally identify each test being conducted_____2

   Verbally identify each test being performed.

2. Failure to verbally identify each problem_____5

   Failure to verbally identify is also interpreted as failure to find the problem.

3. Failure to correct each problem_____5

   The bench participant shall properly correct the problem and continue with the proper tests. Once a bench participant finds a predetermined problem and does not correct it before continuing with the remaining tests, he/she shall receive a five point discount for continuing without correcting the problem and a pending five point discount for failing to correct the problem. If all of the remaining tests are properly

conducted and passed and the participant returns to the uncorrected problem and corrects it, the pending five point discount will not be assessed. Should the participant continue on from this point and properly conduct all of the remaining tests again, he/she would also have the original five point discount for continuing tests removed.

4. Failure to conduct any visual examination or test on the BIOPAK 240-S, each test_____5

5. Failure to tighten connections properly during assembly or testing, each connection_____1

   All connections must be tightened on the apparatus and verbally identified as hand tight or wrench tight at the time the connection is tightened. Failure to verbally identify at the time the connection is being tightened will result in a one point discount for each.

   This includes:

   - Vent Valve Secondary Body - hand tight
   - Vent Valve Primary - hand tight
   - Diaphragm Worm Gear Clamp - wrench tight
   - Constant Flow Restrictor Fitting - wrench tight
   - Breathing Hose Worm Gear Clamps - wrench tight
   - Tube quick Disconnect Fittings - hand tight
   - Canister End Cap to Coolant Canister Body - hand tight
   - Cylinder connections - hand tight
   - Hose connections to Facepiece hose adapters - hand tight
   - Hose Adapter fitting to Facepiece Assembly - hand tight
   - Test fixture connections - hand tight

6. Failure to comply with rules not covered in discount sheet, each infraction_____2

   If the discount is not listed on the discount sheet, and if it is not covered under one of the approved rules of the Contest, do not improvise a discount to cover the suspected violation.

D. Visuals

1. Failure to conduct a proper visual examination of the Upper and Lower Housing / harness_____1

   The visual examination will include an examination of the harness assembly, lower housing, upper housing, visible sealing rings, external gage, $O_2$ regulator, and warning whistle. Failure to examine and verbally identify the examination will result in one discount for each. (Maximum 4 points)

2. Failure to conduct a proper visual examination of the Breathing Chamber Assembly_____1
   The participant will verbally identify that the diaphragm is being examined for pliability and signs of deterioration. The participant will verbally identify that the o-ring and sealing edges are being examined for signs of deterioration. Failure to examine and verbally identify the examination will result in one discount for each. (Maximum 2 points)

3. Failure to conduct a proper visual examination of the $0_2$ cylinder_____1

   A proper cylinder examination includes a visual inspection of the cylinder. The participant will verbally identify the cylinder pressure on the gage, the pressure rating on cylinder and the latest hydrostatic test date. Participant will inform the judge if the cylinder pressure is less than 2,700 PSI. Failure to examine and verbally identify the examination will result in one discount for each. (Maximum 4 points)

4. Failure to conduct a proper visual examination of the carbon dioxide scrubber_____1

   A proper examination includes a visual inspection for dents and defects. Damage and proper lubrication of O-ring seals, foam pad thickness and adequate coverage of the canister. Failure to examine and verbally identify the examination will result in one discount for each. (Maximum 3 points)

5. Failure to conduct a proper visual examination of the coolant canister assembly_____1

The visual examination will include an examination of the canister for damage and defects, o-ring seal, foam moisture absorbent pad and a gelpak freeze form. Failure to examine and verbally identify the examination will result in one discount for each. (Maximum 2 points)

6. Failure to conduct a proper visual examination of the Facepiece_____1

   The visual examination will include an examination of the head strap assembly, mask body (including sealing edges), the lens, speaking diaphragm, wiper or anti-fog lens insert, and inner nose cup. Failure to examine and verbally identify the examination will result in one discount for each. (Maximum 4 points)

7. Failure to conduct a proper visual examination of the hoses_____1

   The participant will verbally identify that the hoses are being inspected for pliability and signs of deterioration. Stretching or manipulating the hoses with a massaging action will be part of this examination. The participant will verbally identify that the sealing edges are being examined for signs of deterioration. Failure to examine and verbally identify the examination will result in one discount for each. (Maximum 2 points)

E. <u>Tester</u>

1. Failure to conduct the proper high pressure leak test_____2

   Verify that breathing hoses are connected together with the hose coupler fitting. Remove breathing chamber lid and CO2 scrubber. Wedge two wooden tongue depressors in one of the slots along the edge of the breathing chamber to push the diaphragm away from the internal breathing well. Open O2 cylinder valve. Check each plumbing joint with leak tec, allowing the solution to sit for a minimum of one minute and then visually inspect each joint for signs of constant bubble formation.

2. Failure to conduct a proper constant flow test_____2

   Slide a test flow meter over the demand valve housing located in the center of the breathing chamber well. Wedge a wooden tongue

depressor in two of the slots along the edge of the breathing chamber to push the diaphragm away from the internal breathing well. Open O2 cylinder valve. The flow reading on the flow meter should be between 1.64 and 2.4 Lpm. Participant will verbally state flow reading. Remove tongue depressors. Close O2 cylinder valve.

3. Failure to conduct a proper low pressure leak test_____2

Remove the hose coupler fitting and connect the hoses to the leak test fixture. Insert a test key into the slotted hole on the rear of the lower housing and turn the key 1/4 turn to lock into position. Open O2 cylinder valve, and use the bypass valve to inflate the balloon of the test fixture to an approximate 45 degree angle. If the balloon over inflates it can be vented through the vent valve of the fixture. Close the oxygen cylinder valve and depress the bypass valve to vent the internal pressure of the BioPak. Observe the test balloon for a period of 2 minutes watching for deflation of the balloon. Disconnect the test fixture and connect breathing hoses to Facepiece. Remove the test key from the rear of the BioPak.

**STATEMENTS OF FACT**
**BENCH BIOPAK 240-S CONTEST**

1. Do not allow oil, grease or other combustible materials to come in contact with the oxygen cylinder or cylinder valve to prevent ignition.

2. The BioPak 240-S is approved for respiratory protection at temperatures above 15 degrees F.

3. The exhalation breathing hose is a flexible hose that will transfer user exhalation from the mask and into the breathing chamber.

4. The breathing chamber provides carbon dioxide absorption, positive pressure, and maintains system volumetric control through venting and adding oxygen.

5. The anti-anoxia valve is simply a plug that will restrict the exhalation hose connection to the breathing chamber in the event oxygen stores have not been installed or activated in the respirator.

6. The diaphragm and spring combine to form the counter-lung.

7. The demand valve is a mechanically actuated valve located at the upper end of the diaphragm inhalation travel stroke.

8. The demand valve insures that the respirator will supply the user with additional oxygen as required and will also insure against the respirator going into a negative pressure situation.

9. The flow restrictor admits a constant flow of oxygen at 1.78 Lpm.

10. The coolant canister is a housing that contains a frozen gel tube or pack.

11. Breathing gas enters the cooler at approximately 120 degrees F.

12. The frozen gel in the coolant canister will absorb much of the breathing gas heat to maintain the gas temperature below 90 degrees F.

13. The inhalation breathing hose is a flexible hose that will transfer carbon dioxide-free, cooled and condensed breathing air from the coolant canister into the inhalation port of the Facepiece.

14. The oxygen cylinder is a carbon composite wrapped, aluminum lined, DOT approved pressure vessel.

15. The oxygen cylinder will hold 21 cubic feet of oxygen compressed to 3000 psi when fully charged.

16. The oxygen cylinder requires hydrostatic testing every 5 years.

17. The oxygen cylinder shall only be charged with U.S.P. medical grade 100% oxygen.

18. The pressure regulating mechanism will reduce the high pressure of the oxygen cylinder to approximately 260 psig.

19. Low pressure plumbing includes the bypass valve, alarm whistle and associated small diameter tubing.

20. The alarm whistle will provide a 92 dB audible signal for 45-60 seconds whenever remaining oxygen stores are 25% of full capacity.

21. The Turn-Around Maintenance Tag provides an indication of completed procedures and inspections for user verification before BioPak uses.

22. Only use disinfectant agent that does not contain alcohol or chlorine that can deteriorate Facepiece lens and rubber components.

23. Do not totally submerge the breathing chamber into the disinfectant solution to avoid contact of solution with the demand housing flow restrictor.

24. Oxygen cylinders that have a pressure gauge reading of 0 psig must be purged and pulled into a vacuum to remove all traces of moisture before filling.

25. Oxygen cylinder storage temperature should be maintained as close as possible to 70 degrees F at all times.

26. The Gel Pac or Cool Tube is to be placed into a freezer for at least 8 hours at a temperature between 15 degree F (-10 C) and -15 degree F (-26 C).

27. When conducting a Flow Test verify a flow reading of at least 1.64 Lpm.

28. Use only LIMEPAC absorbent agent to refill the scrubber canister.

29. Do not expose the absorbent material to the ambient atmosphere for more than a total of 1 hour during recharging and/or servicing.

30. Carbon dioxide absorbent material has a shelf life of 5 years when sealed in its shipping container.

31. Once the shipping container seal is broken the shelf life of the absorbent is reduced to 1 year.

32. Replace any scrubber foam pad that is less than 1/8 inch thick over the absorbent coverage area or 1/32 inch thick on the outside diameter.

33. Any scrubber foam pad that does not overlap the outer edge of the canister body should be replaced.

34. The large o-ring located on the inside diameter of the breathing chamber should be lightly greased with Dow-111.

35. The large o-ring located on the outside diameter of the breathing chamber should be lightly greased with Dow-111.

36. Use anti-fog cloths to apply a heavy coat of anti-fog agent onto the exposed inside surface of the Facepiece lens and/or anti-fog lens.

37. The chest mounted pressure gauge should have the same reading as the cylinder gauge after 90 seconds.

38. The oxygen cylinder pressure should be between 2700 and 3000 psig for the BioPak 240-S to be ready for use.

39. Leak-Tec solution should be used to check plumbing connections on the BioPak 240-S.

40. When performing High Pressure Leak Testing Leak-Tec solution should be allowed to sit for a minimum of 1 minute then visually inspected for signs of constant bubble formation.

41. Severe over inflation of the test balloon can cause damage to the balloon itself and to the vent valve of the breathing chamber.

42. If the test key is left in the BioPak 240-S it will result in excessively high breathing resistance, improper function and may damage the diaphragm of the breathing chamber.

43. The Carbon Dioxide Scrubber Foam Pad should be replaced after 20 uses.

44. The Facepiece Anti-Fog insert should be replaced after 20 uses.

45. The Oxygen Cylinder Sealing Washer should be replaced after 50 uses.

46. The Breathing Chamber ID O-Ring should be replaced after 50 uses.

47. The Breathing Chamber OD O-Ring should be replaced after 50 uses.

48. The Coolant Canister End Cap O-Ring should be replaced after 50 uses.

49. Do not attempt to lubricate an o-ring while it remains in its seat.

50. Although the oxygen cylinder sealing washer serves the same purpose as an O-ring it should never be lubricated.

51. The BIOPAK 240-S breathing apparatus has several Facepiece assemblies approved for their unit.

52. Only use Cristo-Lube on the o-rings located in the following locations:
    Bypass Valve
    Alarm Whistle Assembly
    Flow Restrictor O-Ring Seal
    Connector Tube O-Ring Seal

53. The regulator assembly can not be serviced or repaired in the field.

54. The BioPak 240-S weighs 35 pounds when fully charged and ready for use.

55. Red visual indication on chest mounted pressure gauge to indicate 25% of rated duration, approximately 1 hour remaining.

56. Lower housing style must match upper style in terms of latch type.

57. The 1/8 inch Tube Quick Disconnect Fitting-Red shall have release mechanism locked into position with a cable tie.

58. The 5/32inch Tube Quick Disconnect Fitting-Brass shall have release mechanism locked into position with a cable tie.

59. The vent valve primary spring is silver in color.

60. The vent valve secondary spring is red in color.

61. One keg of carbon dioxide absorbent will provide approximately 11 fills.

62. The inhalation hose is marked with a nylon 8 inch green cable tie.

63. The exhalation hose is marked with a nylon 8 inch red cable tie.

64. The oxygen cylinder has a standard or extended handle option.

65. All users of the BioPak 240-S must be trained by qualified instructors in donning, operation, inspection and emergency use procedures.

66. Prior to using the BioPak 240-S it must be determined that the user is medically fit.

67. Use the BioPak 240-S with adequate skin protection when worn in gases or vapors that poison by skin absorption.

68. Metabolic consumption rate of oxygen at a moderate work load is 1.0 to 1.5 lpm.

69. Before removing the oxygen cylinder, verify that the cylinder valve is closed, chest gauge reads 0 psi, and depress bypass valve to relieve any internal pressure.

70. The breathing chamber is held in place with 4 pushpins.

71. Parts should remain in the disinfecting solution for a minimum of 10 minutes.

72. Do not wash and disinfect the carbon dioxide scrubber components until after washing all other components to avoid contact of absorbent granules.

73. Cuts in the outer wrapping of the oxygen cylinder require hydrostatic testing at a test facility.

74. Special effort should be made to prevent oxygen cylinders from being drained below 500 psig to reduce the possibility of external contamination migration into the cylinder.

75. Probable causes of the Facepiece fogging during use are the Anti-Fog lens insert not installed or damaged, or Anti-Fog agent not applied or applied incorrectly.

76. Probable cause of apparatus not achieving 4-hour duration could be a poor or leaking Facepiece seal.

77. Probable cause of apparatus not achieving 4-hour duration could be a Pressure Reducer Failure.

78. Probable cause of apparatus not achieving 4-hour duration could be a leak in the BioPak 240-S.

79. Probable cause of high breathing resistance during exhalation could be Facepiece exhalation valve sticking closed.

80. Probable cause of high breathing resistance during exhalation could be the diaphragm spring in breathing chamber is not properly seated or damaged.

81. Probable cause of high breathing resistance during exhalation could be the vent valve in the breathing chamber not opening properly.

82. Probable cause of high breathing resistance during inhalation could be Facepiece inhalation check valve sticking closed.

83. Probable cause of high breathing resistance during inhalation could be diaphragm spring in breathing chamber is missing or damaged.

84. Probable cause of high breathing resistance during inhalation could be demand valve in breathing chamber has failed.

85. If the Anti-Anoxia valve in the breathing chamber is not operating properly it could cause high breathing resistance during exhalation or inhalation.

86. Probable cause of breathing gas uncomfortably warm during use could be frozen coolant insert has not been installed into the coolant canister.

87. Probable cause of Facepiece failing positive and/or negative testing during user donning could be inhalation or exhalation check valve failure in the Facepiece.

88. Probable cause of BioPak 240-S failing leak testing could be component connections loose.

89. Probable cause of BioPak 240-S failing leak testing could be a system leak.

90. Probable cause of BioPak 240-S failing flow test could be the flow restrictor in the breathing chamber has clogged.

91. Probable cause of BioPak 240-S failing flow test could be the demand valve of the breathing chamber has failed.

92. Probable cause of BioPak 240-S failing flow test could be the pressure regulator has failed.

93. Probable cause of sounds of escaping gas heard during use could be poor Facepiece fit.

94. Probable cause of sounds of escaping gas heard during use could be that the sealing washer between the oxygen cylinder and the pressure regulator is missing or damaged.

95. Probable cause of sounds of escaping gas heard during use could be that the BioPak 240-S has a leak in the breathing loop or the high or low pressure plumbing systems.

96. Probable cause of alarm indications of remaining service time not functioning correctly could be the chest mounted pressure gauge has failed or pressure line has been severed.

97. Probable cause of alarm indications of remaining service time not functioning correctly could be that the alarm whistle requires tone adjustment.

98. Probable cause of alarm indications of remaining service time not functioning correctly could be that the alarm whistle has failed.

99. Probable cause of breathing gas uncomfortably warm during use could be that the user is working in high ambient temperatures.

100. Probable cause of apparatus not achieving 4-hour duration could be that the bypass valve is utilized to clear Facepiece lens or used excessively.

# BioPak – 240-S

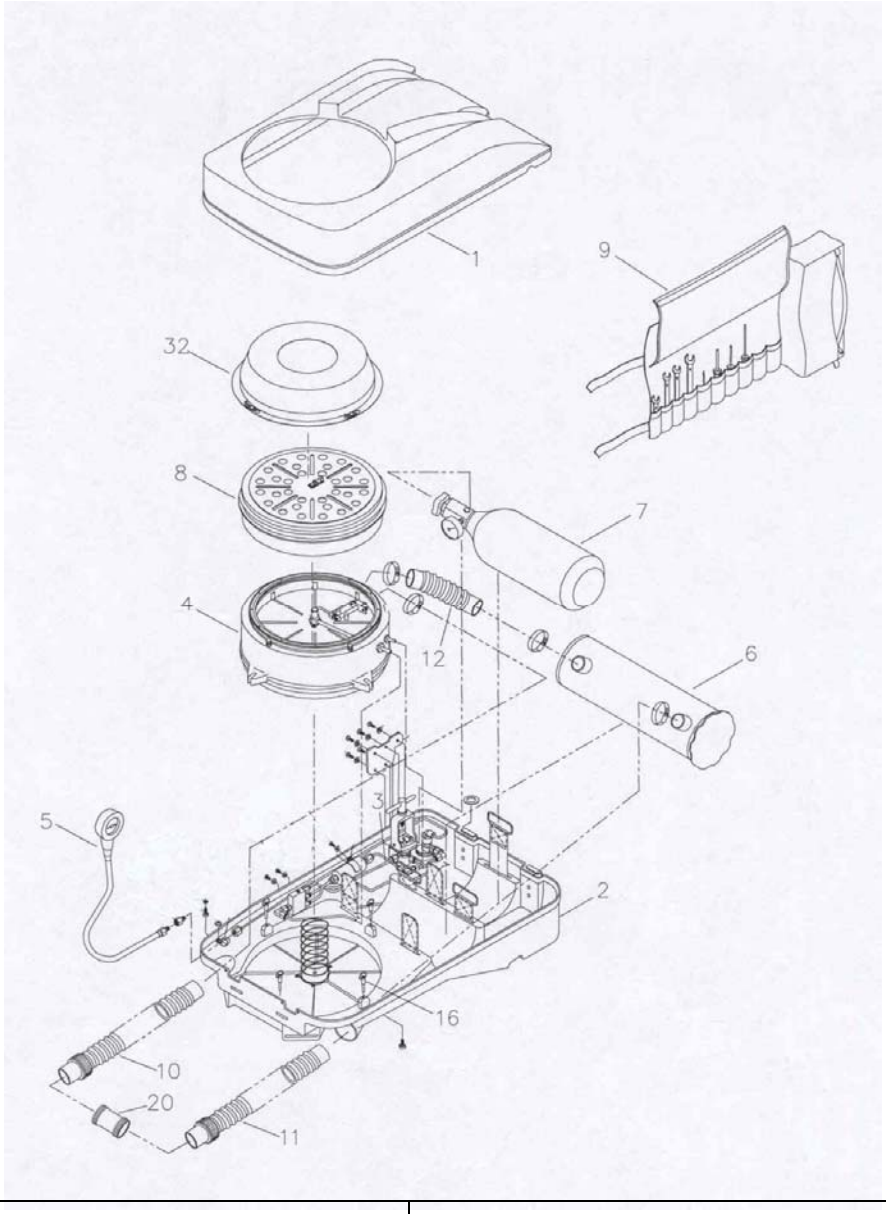


| 1 Cons. No. | 2 Designation | 1 Cons. No. | 2 Designation |
|---|---|---|---|
| 1 | Upper Housing Assembly | 9 | Toolkit Assembly |
| 2 | Lower Housing Assembly | 10 | Exhalation Breathing Hose Assembly |
| 3 | Pneumatics Assembly | 11 | Inhalation Breathing Hose Assembly |
| 4 | Breathing Chamber Assembly | 12 | Connection Hose Assembly |
| 5 | Chest Mounted Pressure Gauge Assembly | 16 | Breathing Chamber Push Pin |
| 6 | Coolant Canister Assembly | 20 | Breathing Hose Coupler Fitting |
| 7 | Oxygen Cylinder Assembly | 32 | Breathing Chamber Cover |
| 8 | Carbon Dioxide Scrubber Assembly | | |

# Lower Housing Assembly

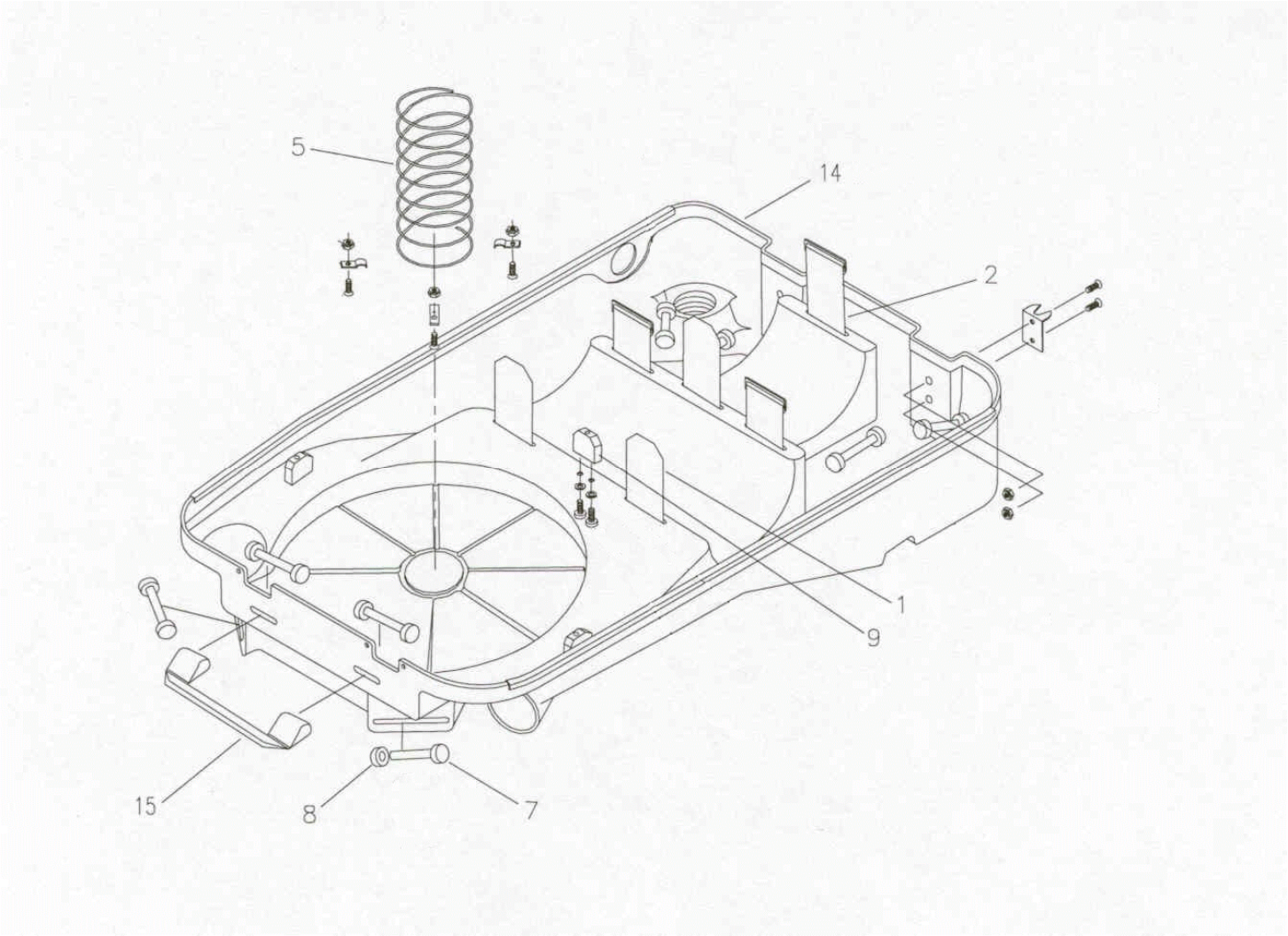


| 1 2<br>Cons. No. Designation | 1 2<br>Cons. No. Designation |
|---|---|
| 1 Coolant Canister Hold-down Strap<br>2 Oxygen Cylinder Hold-down Strap<br>5 Diaphragm Spring<br>7 Long Harness Retaining Pin | 8 Harness Retainer Pin Cap<br>9 Breathing Chamber Mounting Block<br>14 Lower Housing with Hardware<br>15 Carrying Handle Strap |

# Upper Housing Assembly

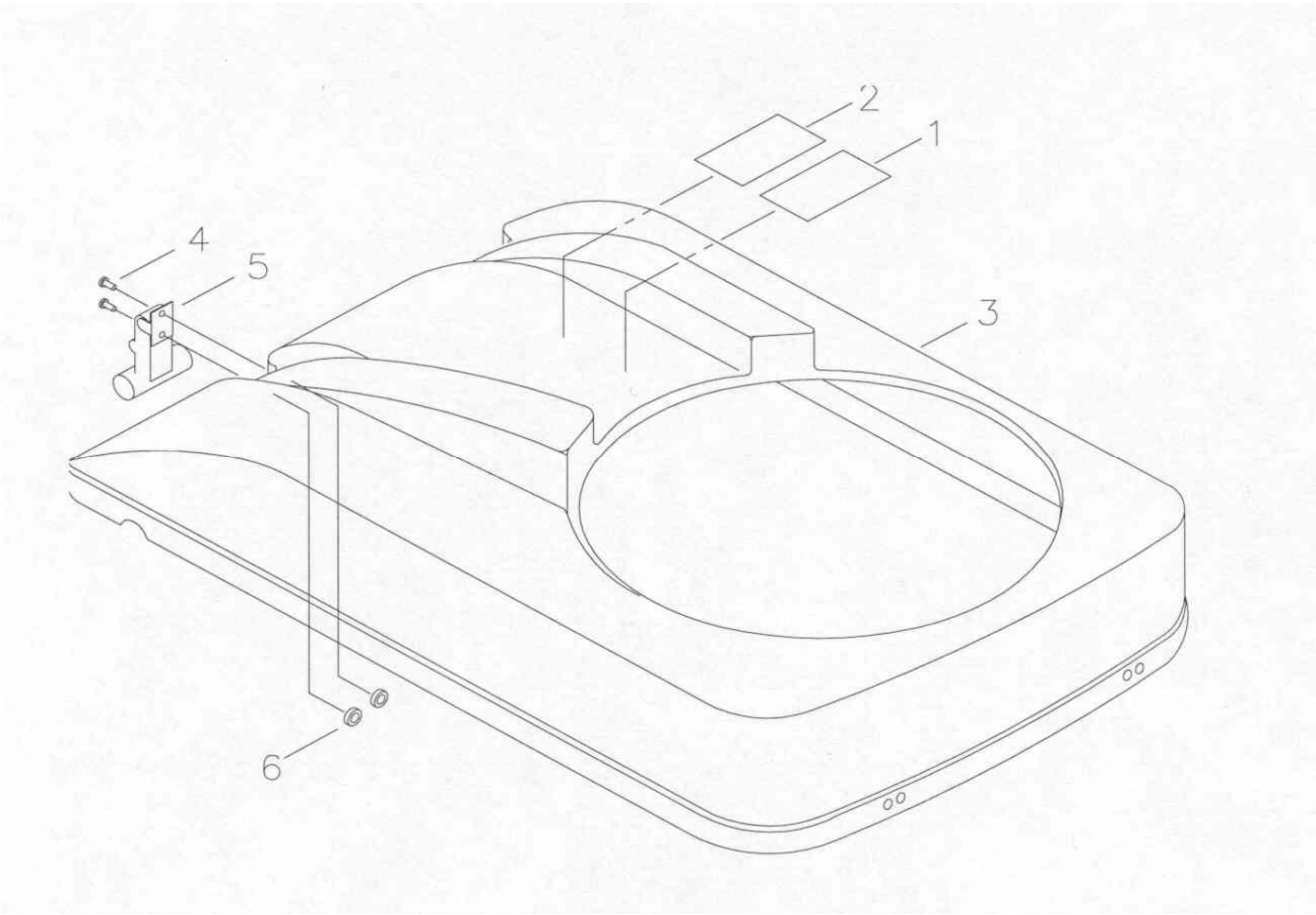


| 1 Cons. No. | 2 Designation | 1 Cons. No. | 2 Designation |
|---|---|---|---|
| 1 | Warning Label | 4 | Pan Head Screw |
| 2 | USA Label | 5 | Flexible T-Handle Draw Latch |
| 3 | Upper Housing with Hardware | 6 | Hex Nut |

# Pneumatic Assembly

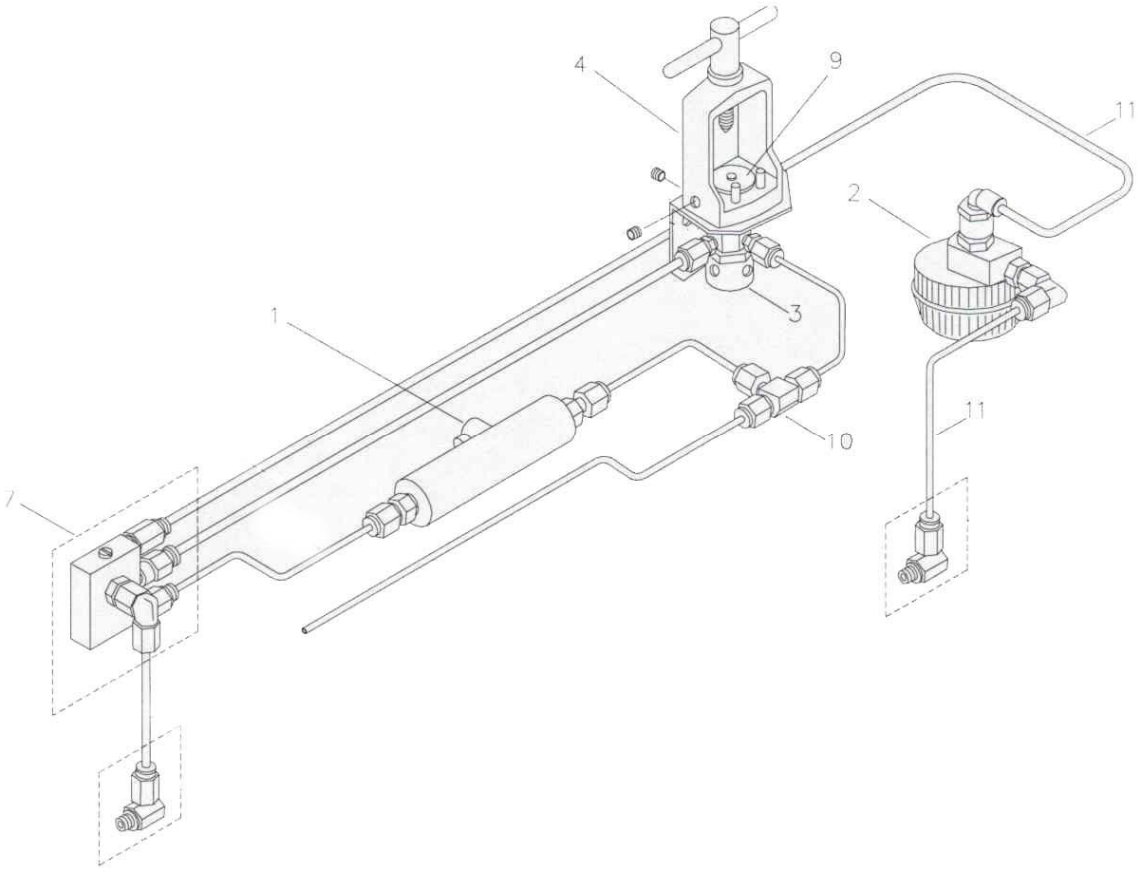


| 1 2<br>Cons. No. Designation | 1 2<br>Cons. No. Designation |
|---|---|
| 1 Alarm Whistle Assembly<br>2 By-pass Valve Assembly<br>3 Oxygen Cylinder Pressure Reg. w/fittings<br>4 Oxygen Cylinder Yoke w/ Handle | 7 Manifold Block Assembly<br>9 Oxygen Cylinder Sealing Washer<br>10 High Pressure Tube Assembly<br>11 1/8" Nylon Tubing |

# By-Pass Valve Assembly

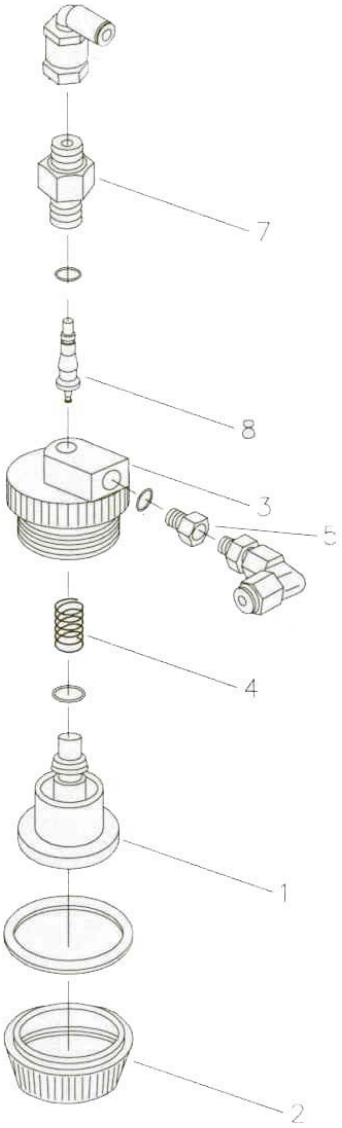


| 1 2<br>Cons. No. Designation | 1 2<br>Cons. No. Designation |
|---|---|
| 1 Push Button<br>2 Valve Guard<br>3 Valve Body<br>4 Valve Spring | 5 Bushing<br>7 Valve Holder<br>8 Valve Core |

# Breathing Chamber Assembly

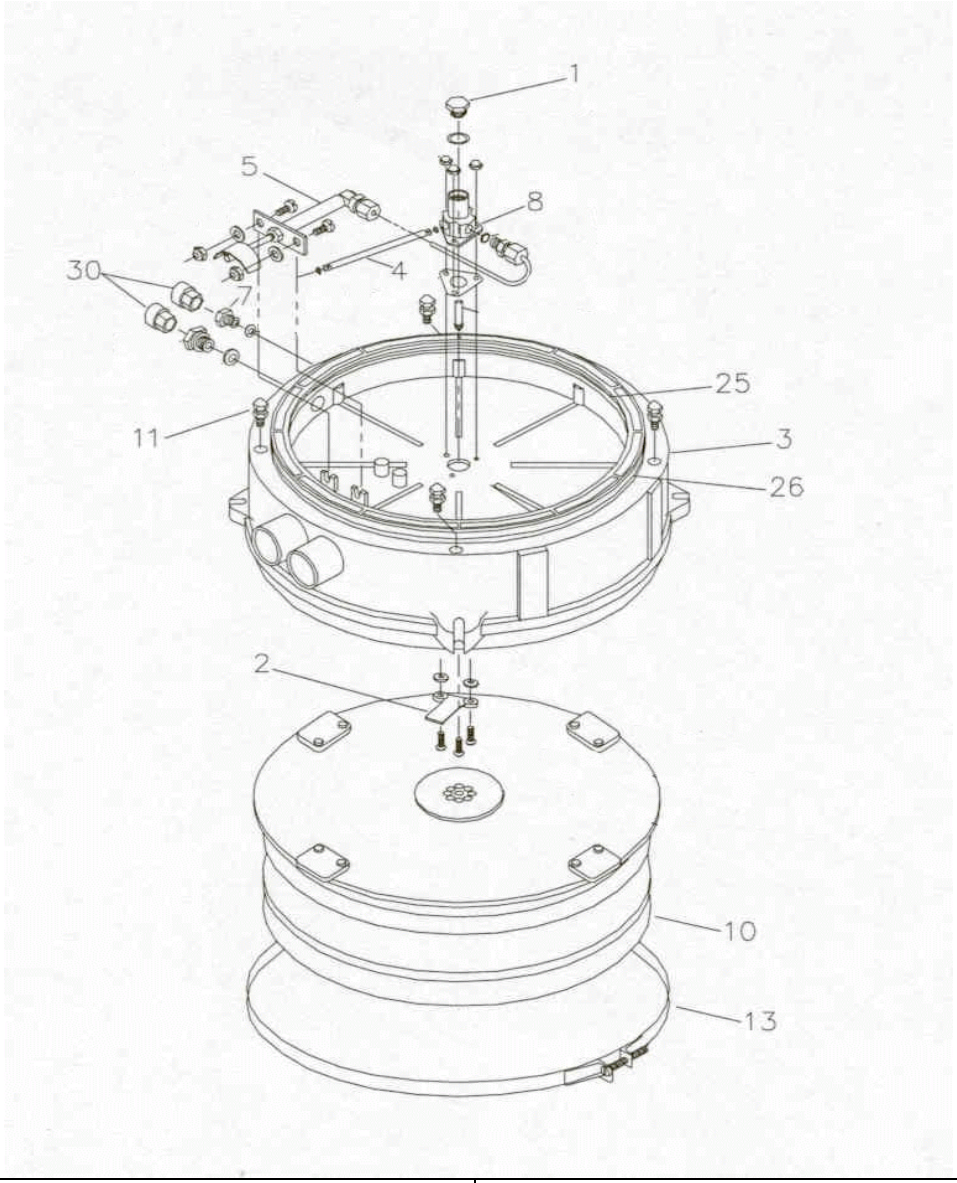


| 1 Cons. No. | 2 Designation | 1 Cons. No. | 2 Designation |
|---|---|---|---|
| 1 | Constant Flow Restrictor Fitting | 10 | Diaphragm Assembly |
| 2 | Add Valve Lever | 11 | Latch Stud |
| 3 | Center Section Housing | 13 | Diaphragm Worm Gear Clamp |
| 4 | Supply Connector Tube | 25 | O-Ring Seal |
| 5 | Anti-Anoxia Valve Assembly | 26 | O-Ring Seal |
| 8 | Demand Housing | 30 | Quick Connect Coupler Fitting |

# Diaphragm Assembly

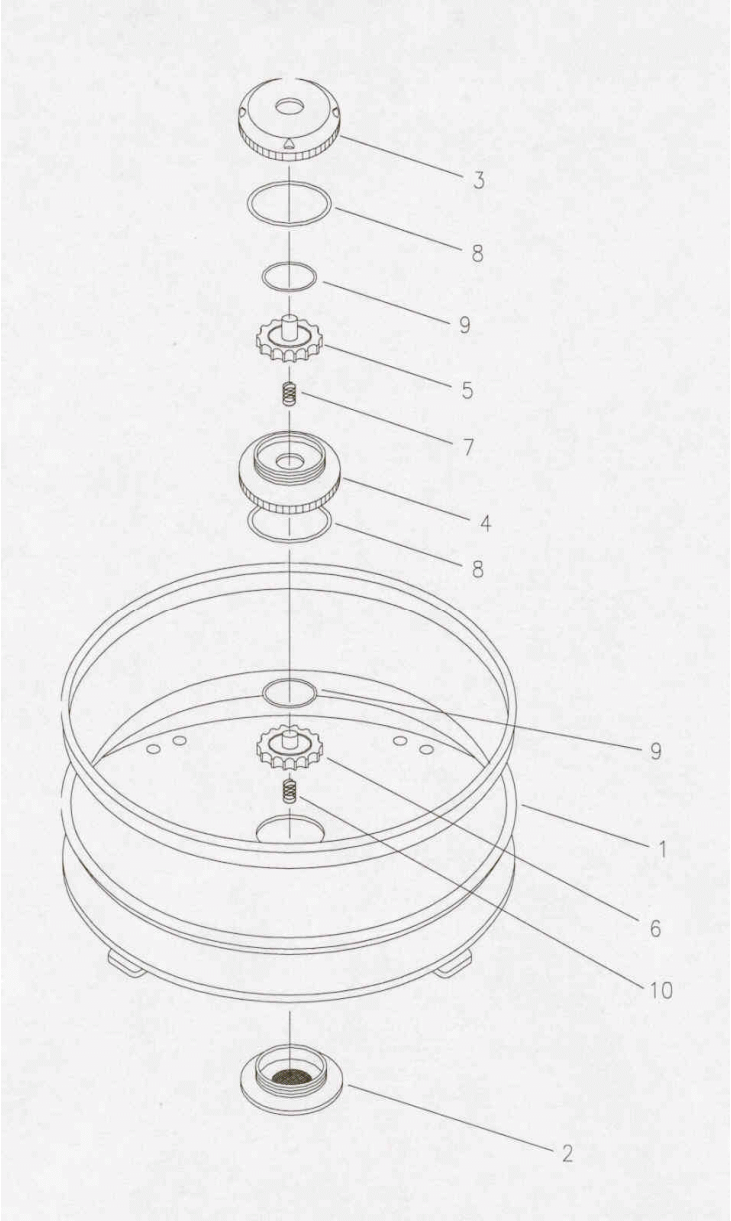


| 1 Cons. No. | 2 Designation | 1 Cons. No. | 2 Designation |
|---|---|---|---|
| 1 | Diaphragm with Hardware | 6 | Vent Valve Secondary Seat |
| 2 | Vent Valve Cap w/ Screen | 7 | Vent Valve Spring (Silver) |
| 3 | Vent Valve Primary Body | 8 | O-Ring Seal |
| 4 | Vent Valve Secondary Body | 9 | O-Ring Seal |
| 5 | Vent Valve Primary Seat | 10 | Vent Valve Spring (Red) |

# Carbon Dioxide Scrubber Assembly

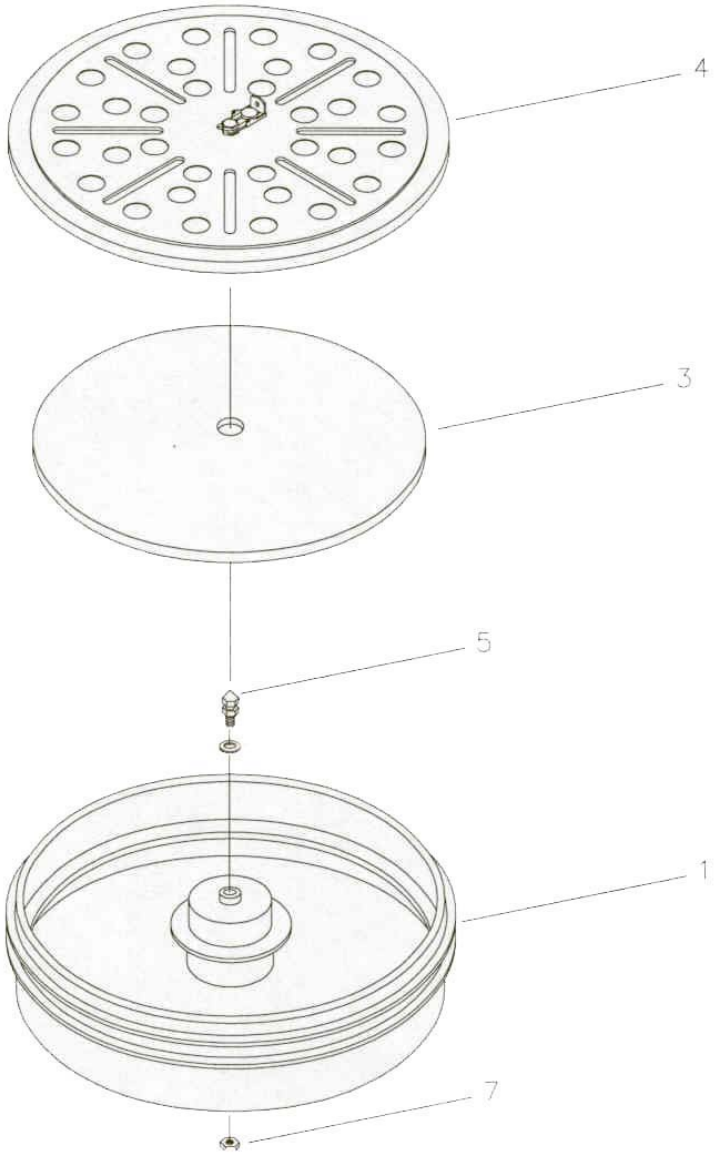


| 1 Cons. No. | 2 Designation | 1 Cons. No. | 2 Designation |
|---|---|---|---|
| 1 | Scrubber Housing | 5 | Latch Stud |
| 3 | Foam Pad | 7 | Hex Nut |
| 4 | Cover | | |

# Hose Assembly

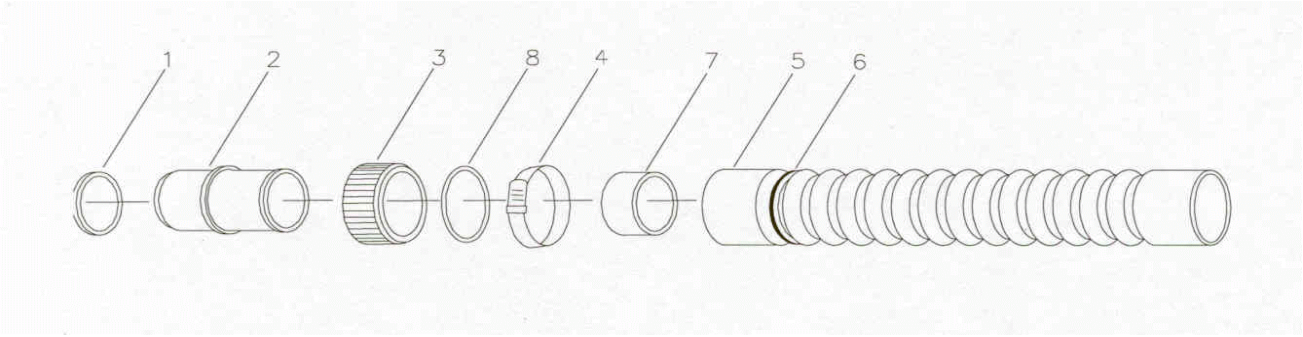


| 1 Cons. No. | 2 Designation | 1 Cons. No. | 2 Designation |
|---|---|---|---|
| 1 | Hose Connector Gasket | 5 | Breathing Hose |
| 2 | Hose Connector Body | 6 | Nylon Cable Tie |
| 3 | Hose Connector Nut | 7 | Hose Connection Cuff |
| 4 | Hose Clamp | 8 | Inhalation Hose ID Label |

# Coolant Canister Assembly

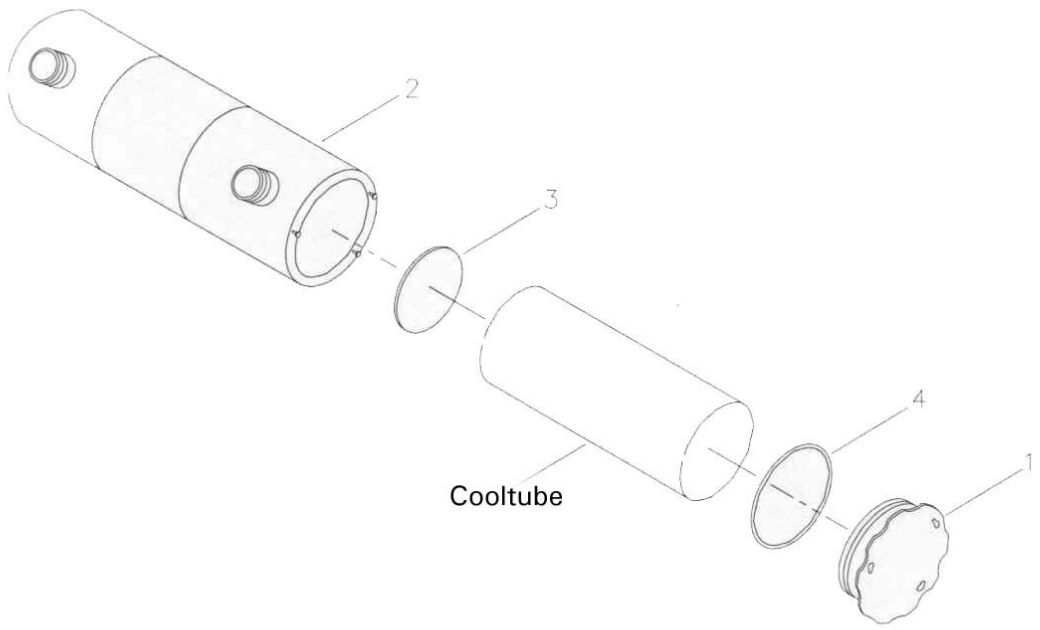


| 1 Cons. No. | 2 Designation | 1 Cons. No. | 2 Designation |
|---|---|---|---|
| 1 | Canister End Cap | 3 | Foam Moisture Absorbent Pad |
| 2 | Canister Body | 4 | O-Ring Seal |

# Oxygen Cylinder Assembly

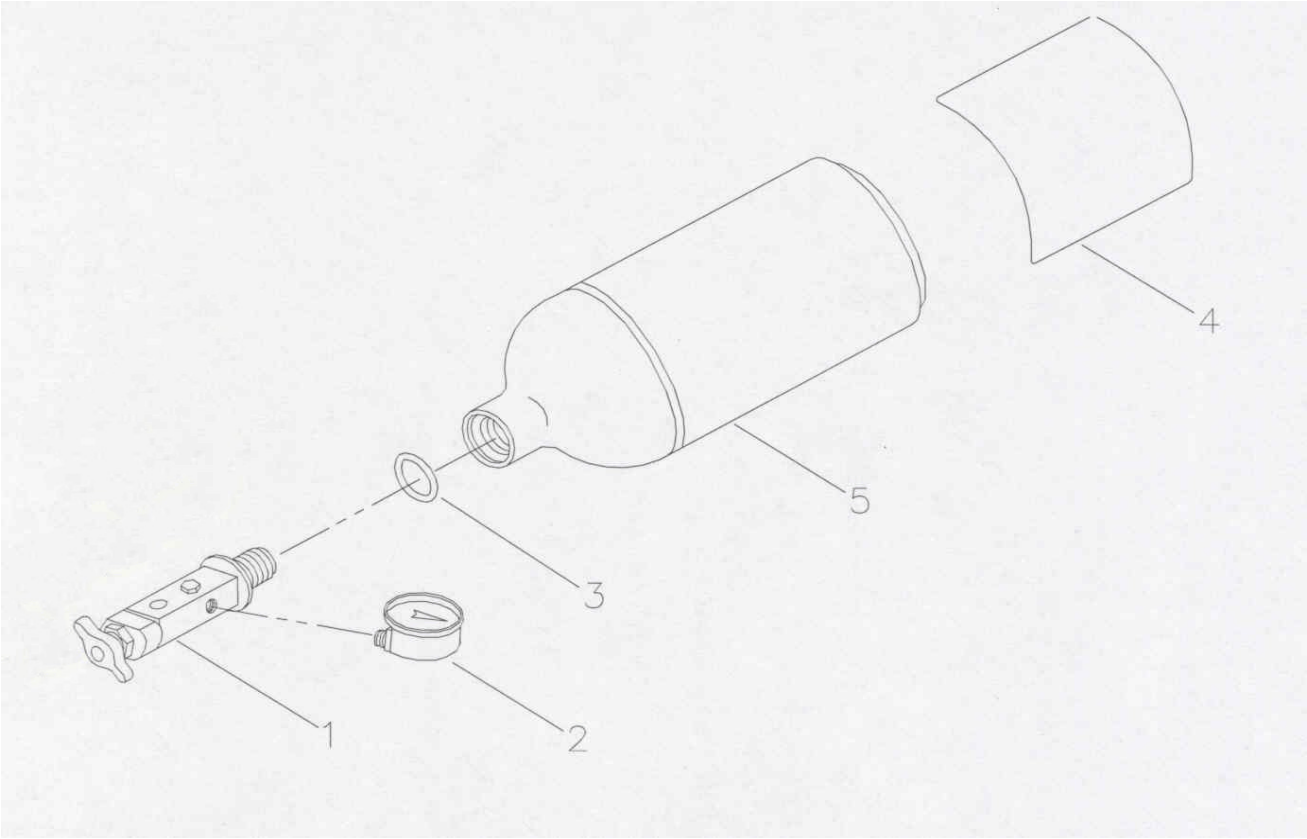


| 1 Cons. No. | 2 Designation | 1 Cons. No. | 2 Designation |
|---|---|---|---|
| 1 | Oxygen Cylinder Valve | 4 | Identification Label |
| 2 | Pressure Gauge | 5 | Composite Pressure Cylinder |
| 3 | O-Ring Seal | | |

# Face Piece Assembly

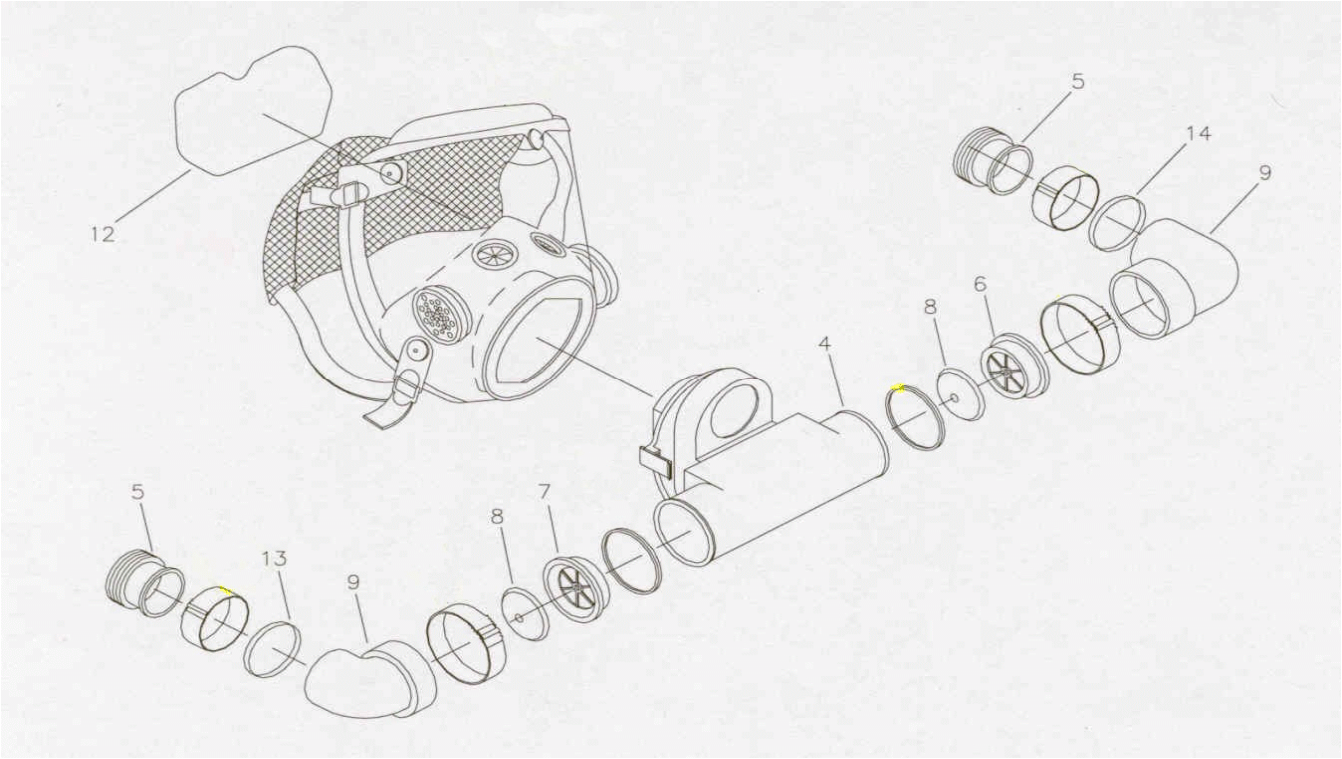


| 1 Cons. No. | 2 Designation | 1 Cons. No. | 2 Designation |
|---|---|---|---|
| 4 | Adapter Assembly | 9 | Elbow Connector |
| 5 | Hose Adapter Fitting | 12 | Anti-fog Lens Insert |
| 6 | Inhalation Check Valve Holder | 13 | Nylon Red Cable Tie |
| 7 | Exhalation Check Valve Holder | 14 | Nylon Green Cable Tie |
| 8 | Check Valve | | |

# Tool Kit Assembly

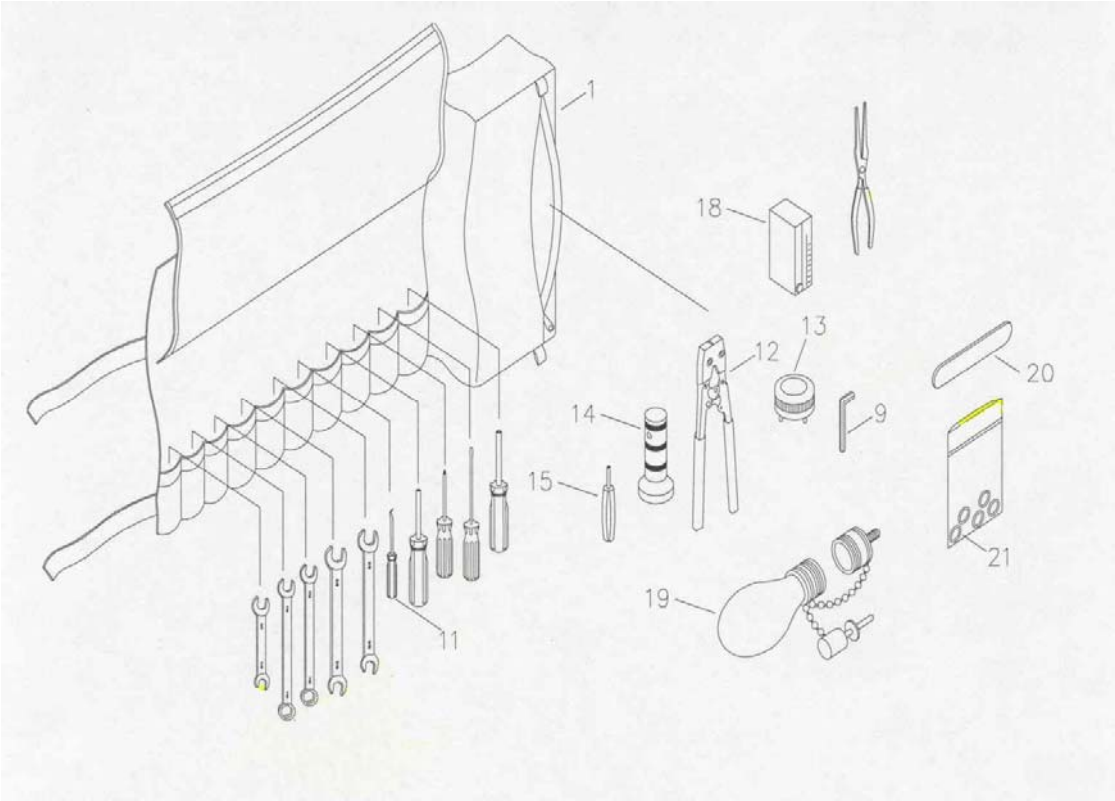


| 1 2<br>Cons. No. Designation | 1 2<br>Cons. No. Designation |
|---|---|
| 1 Tool Kit Pouch<br>9 1/16" Allen Key Wrench<br>11 Combination Pick Tool<br>12 Hose Clamp Ratchet Pincher Tool<br>13 Vent Valve Wrench<br>14 Bypass Valve Wrench | 15 Valve Core Tool<br>18 Flow Test Flowmeter<br>19 Balloon Leak Test Fixture/Test Key<br>20 6" Tongue Depressor<br>21 Small Finger Cot |