ELECTRICAL SYSTEM PERMISSIBILITY CHECKLIST

Listed below are the items and functions that must be maintained for the electrical system to be considered permissible. For a complete equipment permissibility evaluation, this checklist must be used in conjunction with a machine checklist and a power system checklist.

ALL INSPECTIONS AND TESTS SHALL BE PERFORMED IN FRESH AIR.

A. All electrical enclosures must meet the following:

(WEEKLY) 1. ( ) All electrical enclosures are intact {not cracked or broken); the headlight lenses are not loose.

(WEEKLY) 2. ( ) All electrical enclosures have an MSHA plate attached that is clearly stamped with an MSHA certification number (x/P number). These numbers agree with those listed in Table 1.

(WEEKLY) 3. ( ) Use feeler gauges of the appropriate size to insure the clearances between the enclosures listed in Table 1 and their corresponding covers are not exceeded.

4. ( ) All joints forming the flame arresting paths (flanges and covers) are smooth and free from rust, corrosion, and pitting.

(WEEKLY) - DESIGNATES THOSE INSPECTION CHECKS THAT MUST BE PERFORMED DURING THE WEEKLY MAINTENANCE EXAMINATION IN ACCORDANCE WITH 30 CFR, SECTION 75.1914.

THIS DRAWING IS NOT TO BE CHANGED WITHOUT THE APPROVAL OF MSHA

TABLE 1

ITEM NUMBER ON MACHINE LAYOUT DIAGRAM	ENCLOSURE	MANUFACTURER	XP NUMBER	FIT	MAXIMUM ALLOWABLE CLEARANCE IN INCHES
1	ALTERNATOR	MINING CONTROLS	3846--1	BACK COVER	.004
				END COVER, FACE	.006
2	REGULATOR & HEADLIGHT SWITCH	MINING CONTROLS	3846-1	COVER	.003
3	HEADLIGHTS	OCENCO	3221-0	COVER	.002

NOTE: THE SAME INFORMATION IS REQUIRED FOR ANY OTHER ELECTRICAL ENCLOSURE INSTALLED ON THE MACHINE

B. If cables connecting electrical componets are repaired or replaced, they must continue to be:

(WEEKLY) 1. ( ) Clamped in place to prevent undue movement.

(WEEKLY) 2. ( ) Protected from mechanical damage by position, flame resistant hose conduit, metal tubing, or troughs.

NOTE: Flexible or threaded rigid metal conduit is not acceptable.

(WEEKLY) 3. ( ) Not subject to abrasion from sharp corners or edges.

(WEEKLY) 4. ( ) Isolated from hydraulic lines and components.

(WEEKLY) 5. ( ) Isolated from fuel lines.

(WEEKLY) 6. ( ) Flame resistant if not enclosed in hose conduit. This is indicated by "MSHA" markings on the cable.

C. Hose Conduit is:

(WEEKLY) 1. Securely clamped at both ends and MSHA markings are present and appear as "Flame-Resistant, US MSHA, US MESA, or USBM 2G-14/5X."

D. Fastners and mounts:

(WEEKLY) 1. ( ) All electrical system components are securely counted.

(WEEKLY) 2. ( ) Headlights are guarded by -location as shown in Figures 1 & 2.

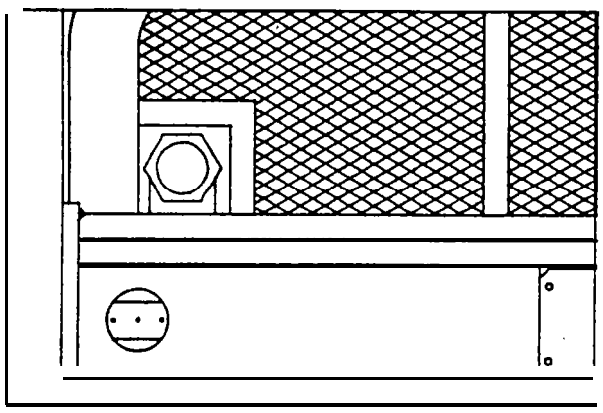

REAR HEADLIGHT ASSY.

Figure I

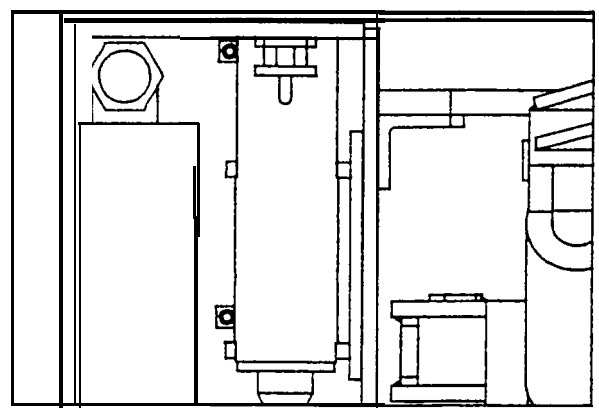

FRONT HEADLIGHT ASSY.

Figure 2

(WEEKLY) - DESIGNATES THOSE INSPECTION CHECKS THAT MUST BE PERFORMED DURING THE WEEKLY

THIS DRAWING IS NOT TO BE CHANGED WITHOUT THE APPROVAL OF MSHA

(WEEKLY) 3. ( ) All threaded covers are secured from loosening by a locking screw, wire, set screw, or other means.

(WEEKLY) 4. ( ) Lockwashers are equivalent devices are provided for all bolts, screws, or studs that secure parts of the explosion-proof e-closures.

(WEEKLY) 5. ( ) None of the fastenings used for joints on the explosion-proof enclosures are used for attaching non-essential parts or for making electrical connections.

E. Lead entrances (packing glands):

(WEEKLY) 1. ( ) All lead entrances (packing glands) are assembled so that the cable jack penetrates into the enclosure and when tightened, a 1/8" minimum clearance remains between the packing nut and stuffing box (Figure 3).

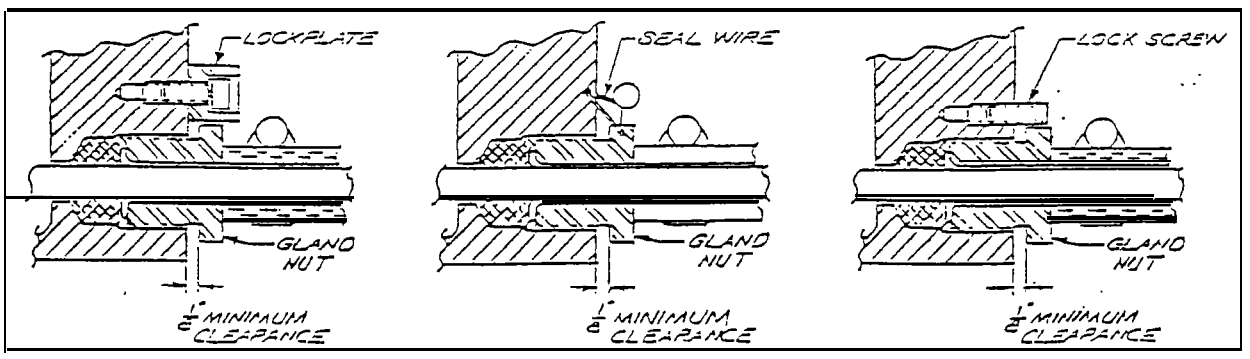

Figure 3

(WEEKLY) - DESIGNATES THOSE INSPECTION CHECKS THAT MUST BE PERFORMED DURING THE WEEKLY MAINTENANCE EXAMINATION IN ACCORDANCE WITH 30 CFR, SECTION 75.1914.

THIS DRAWING IS NOT TO
BE CHANGED WITHOUT THE
APPROVAL Of MSHA

(WEEKLY) 7. ( ) All packing nuts and stuffing boxes are secured from loosening by a locking screw, wire, or other means (Figure 3). All unused Lead entrances are closed with metal plugs which are secured in place by spot welding, brazing, or equivalent (Figure 4).

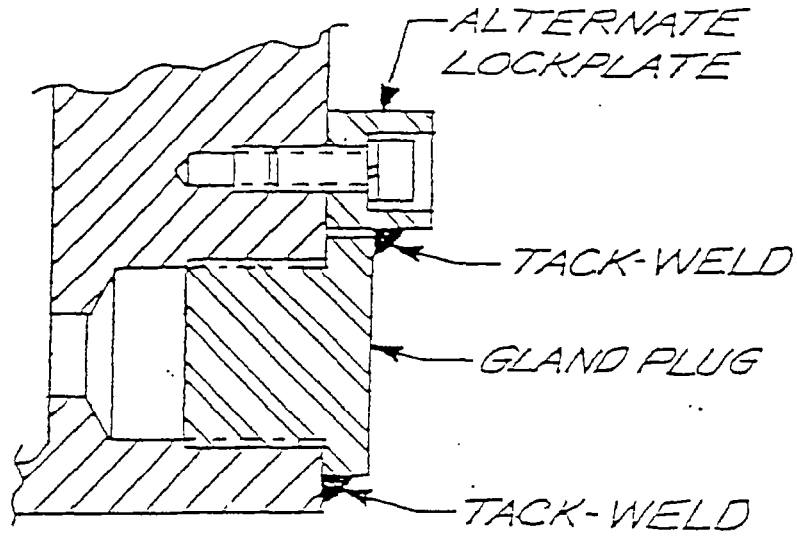

F I G U R E 4

F. Headlights

(WEEKLY) 1. ( ) Are installed at each end of the machine.

(WEEKLY) 2. ( ) Lenses are not cracked, broken, or loose.

(WEEKLY) 3. ( ) Each headlight is securely installed, guarded and operable.

c. Headlight Switch:

(WEEKLY) 1. ( ) The headlight switch must operate properly. Verify by starting the engine, operating the switch and ascertaining its operation

- turns the front headlights on and off
- turns the rear headlights on and off
- turns two (2) rear and one (1) front headlight on and off

The switch must not control or operate any electrical circuits other than the headlights.

THIS DRAWING IS NOT TO BE CHANGED WITHOUT THE APPROVAL OF MSHA

(WEEKLY) - DESIGNATES THOSE INSPECTION CHECKS THAT MUST BE PERFORMED DURING THE WEEKLY MAINTENANCE EXAMINATION IN ACCORDANCE WITH 30 CFR, SECTION 75.1914.

(WEEKLY) 2. ( ) Headlight switch is securely in place.

(WEEKLY) 3. ( ) Headlight glands are sealed and assembled so that the cable jack penetrates into the enclosure and-when tightened, a 1/8" minimum clearance remains between packing nut and the stuffing box. (Figure 3)

(WEEKLY) 4. ( ) All unused lead entrances are closed with metal plugs which are secured in place by spot welding, brazing, or equivalent (Figure 4).

(WEEKLY) 5. ( ) Headlight switch cover is properly installed with all bolts and lockwashers in place and tight (Figure 5).

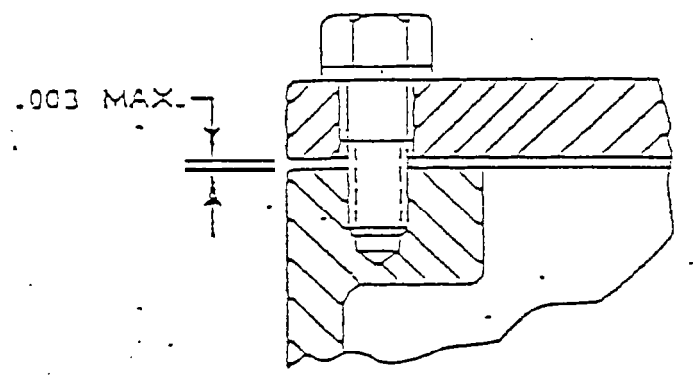

FIGURE 5

(WEEKLY) 1. ( ) "Alternator Housing" is securely in place-

(WEEKLY) 2. ( ) "Alternator Housing Glands" are sealed and assembled so that the cable jacket penetrates into the enclosure and when tightened, a 1/8" minimum clearance remains between packing nut and the stuffing box. (Figure 3)

(WEEKLY) 3. ( ) "Alternator Covers" are properly installed with all bolts and lockwashers in place and tight.

(WEEKLY) - DESIGNATES THOSE INSPECTION CHECKS THAT MUST BE PERFORMED DURING THE WEEKLY MAINTENANCE EXAMINATION IN ACCORDANCE WITH 30 CFR, SECTION 75.1914.

THIS DRAWING IS NOT TO BE CHANGED WITHOUT THE APPROVAL OF MSHA

I. Other Electrical Permissibility Checks:

The following checks may be perfomed when an electrical enclosure had been disassembled for whatever reason,or if there is cause to believe a problem exists within the enclosure.

1. ( ) Electrical connections inside the electrical enclosures are secure (not loose) and are insulated where space is limited. In addition, each headlight unit is electrically "grounded" to the machine frame by a separate conductor in the headlight cable. The ground wires are not broken and are securely atcached to each headlight.

   To verify the above, remove the electrical enclosure covers; disconnect the ground wire attached to each headlight; use an ohmmeter or similar device to verify continuity between the ground wire and the frame of the machine for each headlight.

2. ( ) The engine-driven altenator lighting system includes a separate two-pole switch which controls the operation of the headlights. The switch is wired such that all power conductors in the cable(s) supplying electrical energy to the headlights are deenergized when the switch is placed in the "off" position.

   To verify the above, remove the cover from the electrical enclosure housing the headlight switch; remove the two main power wires (from the alternator) from the switch terminals; place the switch operator in the "off" position; use an ohmmeter or similar instrument to verify that the input power wire terminals on the switch are discocnected from all other wires attached to the switch terminals; reconnect the power wires to the switch terminals.

THE DRAWING IS NOT TO BE CHANGED WITHOUT THE APPROVAL OF MSHA

3. ( ) Fuses are installed, in the wiring located inside the alternator housing, for short circuit protection of each power conductor in the lighting system.

To verify the above, disassemble the alternator enclosure; examine the wiring and each fuse; verify that a fuse, not exceeding 25 amp, is installed in each power conductor of the alternator cable.

4. ( ) Fuses are installed in the wiring located inside the headlight switch housing, for short circuit protection of the switch assembly in the lighting system.

To verify the above, disassemble the headlight switch housing; examine the wiring of each fuse; verify that a fuse, not exceeding 15 Amp, is installed in each output power conductor from the regulator.

5. ( ) To verify the short circuit protection of each power conductor to the front headlight assemblies, disassemble the headlight switch housing; examine the wiring of each fuse; verify that a fuse, not exceeding 10 amp is installed in each power conductor of the front headlight assemblies.

6. ( ) Proper bulbs have been installed in the headlights.

To verify the above, disassemble the headlights; a 12 volt and 50 watt bulb is installed.

THIS DRAWING IS NOT TO BE CHANGED WITHOUT THE AFPROVAL OF MSHA

MACHINE LAYOUT DIAGRAM

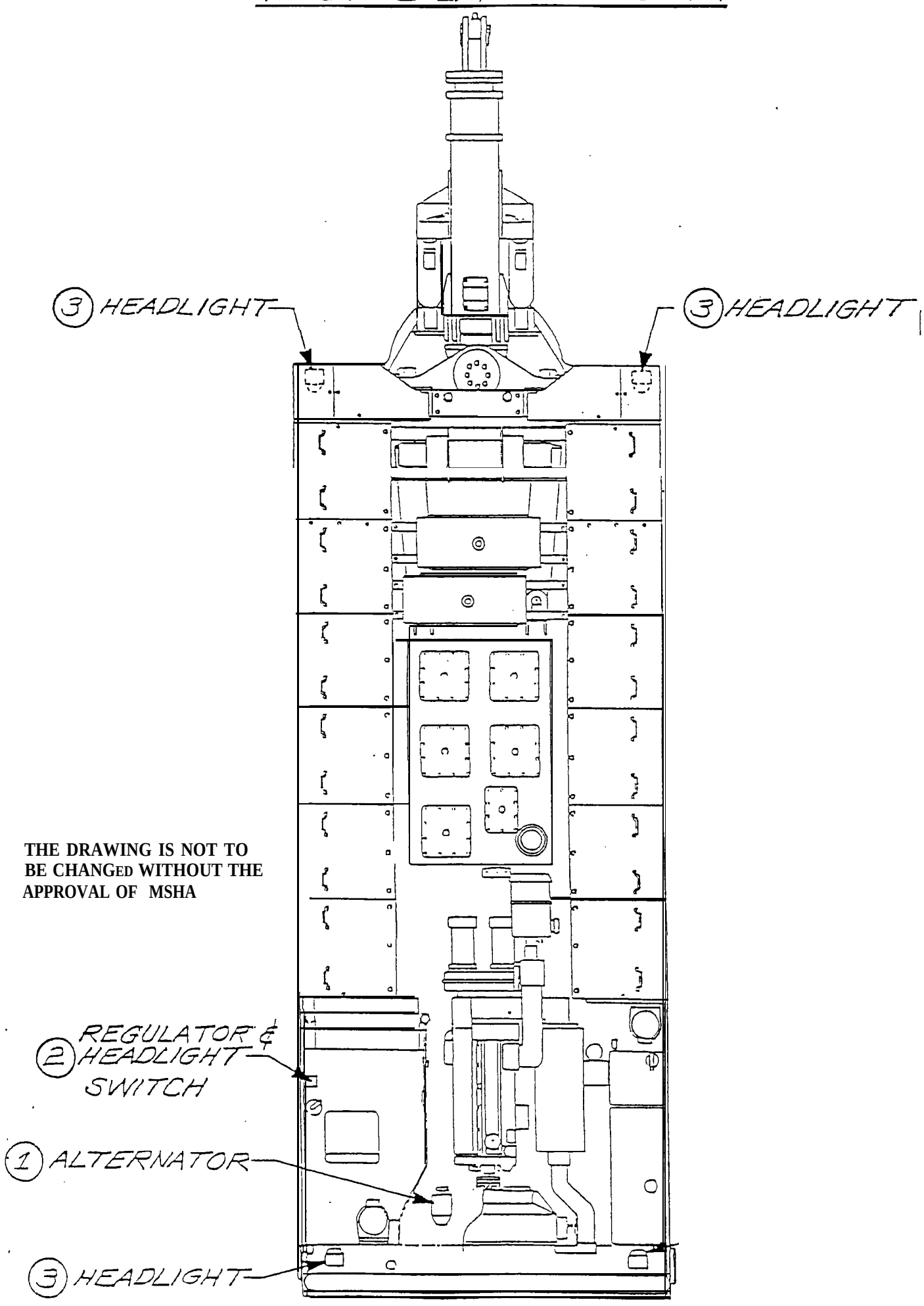

THE DRAWING IS NOT TO BE CHANGED WITHOUT THE APPROVAL OF MSHA