ASTP4002

STANDARD TEST PROCEDURES FOR ACCEPTANCE OF OVERCURRENT RELAYS

U.S. Department of Labor
Mine Safety and Health Adminstration
Approval and Certification Center

Program Circular
PC 4205-0
1993

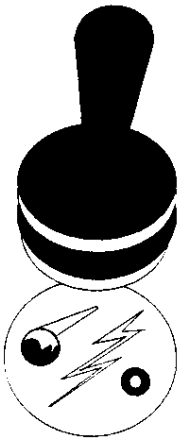

STANDARD TEST PROCEDURE FOR ACCEPTANCE OF OVERCURRENT RELAYS

PROCEDURE NUMBER

ETD-STP-0003-00

APRIL 9, 1991

U.S. DEPARTMENT OF LABOR
MINE SAFETY AND HEALTH ADMINISTRATION
APPROVAL AND CERTIFICATION CENTER
ENGINEERING AND TESTING DIVISION
ENGINEERING SUPPORT BRANCH

OVERCURRENT DEVICES AND RELAYS

STANDARD TEST PROCEDURE

TESTS FOR ACCEPTANCE OF OVERCURRENT RELAYS

INDEX OF TESTS

		PAGE
1.0	PURPOSE	1
2.0	SCOPE	1
3.0	IDENTIFICATION	1
3.3	CHARACTERISTICS TEST	1
3.4	ACCELERATED LIFE AND TEMPERATURE VARIATION TEST	3
3.5	FAIL SAFE TEST	6
3.6	ENERGIZED RELAY TEST	7
3.7	MAINTAINING CALIBRATION TEST	8
3.8	SENSING LEAD TEST	10
3.9	BIDIRECTIONAL OPERATIONS TEST	10
3.10	VOLTAGE TRANSIENT TEST	11

Index of Figures

Figure 1 Characteristics Test
Figure 2 Accelerated Life Test

Procedure Number: ETD-STP-0003-00 Date: 04/09/91

TEST FOR ACCEPTANCE OF SOLID STATE OVERCURRENT RELAYS

1.0 PURPOSE

This document establishes the Standard Testing Procedure for testing solid state overcurrent relays and metered relays and their remotely located peripheral parts for acceptance and extensions of acceptance.

2.0 SCOPE

These procedures apply to all solid state overcurrent relays and metered relays and their remotely located peripheral parts as required by the provisions of the Federal Coal Mine Health and Safety Act of 1969, Section 75.1001.

2.1 For ease of operating, testing and calibration of the overcurrent relay shall have the connections and adjustment controls front mounted. The dial setting shall not be adjustable beyond the specified maximum range shown on the nameplate.

3.0 IDENTIFICATION

3.1 The test sequence generally follows that listed. However, the sequence of testing has no effect on acceptance or rejection and may be changed to accommodate efficiency.

3.2 The solid state overcurrent relay or metered relay and associated documentation are reviewed in detail and the lists developed during the fee estimate is either modified to reflect the required tests or concurred with as the correct list of required tests.

3.3 Direct Current Overcurrent Device Characteristics Test

3.3.1 Purpose. The purpose of the test is to provide the investigator with a basic knowledge of the device's operation. It also establishes a reference about certain measurements for later comparisons. These comparisons will assist in determining whether or not critical components have failed during subsequent testing and whether or not the device is performing within acceptable tolerance of manufacture.

3.3.2 Equipment required. The equipment necessary to perform characteristics test are:

3.3.2.1 A variable AC or DC power supply to provide power to the overcurrent device.

3.3.2.2 Time elapse meter with minimum specifications of frequency ranges: CH A, 0 Hz (DC coupled) or 10 Hz (AC coupled) to 100 MHz, CH B, 0 Hz

(DC coupled) or 10 Hz (AC coupled) to 10 MHz. Display accuracy, ± 1 count ± time-base accuracy. Maximum resolutions: FREQ A, 0.1 Hz at 10 microseconds GATE TIME; RATION A/B, $1/10^6$, average over 10^6 cycles; PERIOD B, 1 microseconds/cycle of B; TIME A B, 1 microseconds; TIME MANUAL 1 microseconds; TOTALIZE A, 1.

3.3.2.3 Oscilloscope with the capability of measuring frequencies of 20,000 hertz and voltages of 100 volts peak-to-peak.

3.3.2.4 A voltmeter.

3.3.3 Test.

3.3.3.1 Install and calibrate the overcurrent device in accordance with the manufacturer's specifications and instructions in a test circuit that is similar to a field installation of the device.

3.3.3.2 Increase the overcurrent device's input supply voltage from zero volts until the overcurrent device's tripping relay just "picks up".

3.3.3.3 Use a volt meter to measure the device's input supply voltage.

3.3.3.4 Record this value on the characteristic test sheet as the pickup voltage.

3.3.3.5 Reduce voltage from nominal until device tripping relay "drops out".

3.3.3.6 Record voltage.

3.3.3.7 Adjust the overcurrent device's set point in accordance with the following formula: Set Point = Minimum + PCX (Maximum-Minimum), where Minimum is the device's minimum set point, Maximum is the device's maximum set point, and PC = 0.00, 0.25, 0.50, 0.75, and 1.00.

3.3.3.8 Arrange a test circuit to deliver overcurrents with ± 10% of the set points calibrated in step 3.3.3.7 to the sensing leads/element(s).

3.3.3.9 Record the value of overcurrent that caused a tripping function at each of the set points.

3.3.3.10 Reverse the polarity of the overcurrents and repeat steps 3.3.3.7, 3.3.3.8, and 3.3.3.9.

3.3.3.11 Adjust the input supply voltage to 80% of the

nominal specified voltage.

3.3.3.12 Repeat steps 3.3.3.6, 3.3.3.7, 3.3.3.8 and 3.3.3.9.

3.3.3.13 Adjust the input supply voltage to the nominal specified voltage and repeat steps 3.3.3.7, 3.3.3.8, 3.3.3.9 and 3.3.3.10.

3.3.3.14 Adjust the input supply voltage to 120% of the nominal specified voltage and repeat steps 3.3.3.7, 3.3.3.8, 3.3.3.9 and 3.3.3.10.

3.3.3.15 Adjust the input supply voltage to the nominal specified voltage.

3.3.3.16 Adjust set points in accordance with the formula specified in step 3.3.3.7 with PC = 0.00, 0.50, and 1.00 and arrange a test circuit to deliver approximately 115% and 200% of each set point to the sensing lead(s)/element(s).

3.3.3.17 Record the value of overcurrent applied at each set point.

3.3.3.18 Arrange the time elapse meter to measure the time period between the application of each overcurrent and the instant the tripping relay activates.

3.3.3.19 Record this data on the characteristic test sheet.

3.3.3.20 Reverse the polarity of the 115% and 200% overcurrents and repeat steps 3.3.3.15, 3.3.3.16, 3.3.3.17 and 3.3.3.18.

3.3.4 Appraisal of Test. When tested in accordance with 3.3.3, the overcurrent device shall:

3.3.4.1 Perform a tripping function in response to each overcurrent applied to the sensing lead(s)/elements(s) in steps 3.3.3.8, 3.3.3.9, 3.3.3.10, 3.3.3.11, and 3.3.3.12.

3.3.4.2 Perform a tripping function in 150 milliseconds or less in response to a 115% overcurrent and 75 milliseconds or less in response to 200% overcurrent.

3.4 Accelerated Life and Temperature Variation Test

3.4.1 Purpose. The purpose of the test is to determine if elevated temperatures for extended periods of time will induce component failure that affects the performance or calibration of the overcurrent

device.

3.4.2 Equipment. The equipment required to perform the test is:

3.4.2.1 Temperature chamber, -50^0 to 350^0F temperature range $\pm$ 0.5^0F air temperature control tolerance accuracy after stabilization.

3.4.2.2 An AC or DC power supply (variable) to supply power to the overcurrent device.

3.4.2.3 Two electronic counters.

3.4.2.4 One 0-15 minute electronic timer with on/off output.

3.4.2.5 A load equivalent to a size 9 contactor.

3.4.2.6 A voltmeter.

3.4.3 Test.

3.4.3.1 Install and calibrate the overcurrent device in accordance with the manufacturer's specifications and instructions in the temperature chamber. See Figure 2 for circuit diagram.

3.4.3.2 Adjust the power supply supplying power to the overcurrent device to 120% nominal and energize the power supply.

3.4.3.3 Turn the temperature chamber on and adjust the temperature for 200^0F. The rate of rise of the temperature in this step is not important.

3.4.3.4 Allow the temperature to stabilize at 200^0F for 30 minutes.

3.4.3.5 Maintain the chamber temperature at 200^0F for 24 hours.

3.4.3.6 Reduce the chamber temperature to ambient and reduce the overcurrent device input voltage to nominal.

3.4.3.7 Refer to the overcurrent device characteristics test 3.3.3, and perform steps 3.3.3.1, 3.3.3.15, 3.3.3.16, 3.3.3.17, 3.3.3.18, 3.3.3.19, and 3.3.3.20.

3.4.3.8 Compare these values with those recorded during the initial overcurrent device characteristics test.

3.4.3.9 If the values recorded in step 3.4.3.7 above are within 10% of those values recorded initially, then go to step 10. If the values are not within 10%, then stop the test.

3.4.3.10 Set up a load equivalent to a size number 9 contactor on the tripping relays contacts.

3.4.3.11 Arrange a timing circuit that will automatically apply overcurrents in accordance with Set Point = Min + PC X (Max-Min) where PC = 0.75. Adjust the timing of the timing circuit to time-in and time-out of the overcurrents to be approximately equal in duration. The timing cycle should be "on" and "off" in 30 seconds.

3.4.3.12 Arrange the two counters to automatically record the number of times the overcurrent is applied and the number of times the overcurrent device tripped in response.

3.4.3.13 Apply control power to the overcurrent device and start the counters.

3.4.3.14 Adjust the temperature of the temperature chamber to 140^{0}F. Maintain the rate of rise of temperature to not more than 20^0 per 30 minute period.

3.4.3.15 After the temperature stabilizes for 30 minutes, reset the counters to zero and maintain the temperature at 140^{0}F for 48 hours. Record counters before and after the 48 hour period.

3.4.3.16 Adjust the temperature of the temperature chamber to -15^{0}F. Maintain the rate of temperature change to not more than 20^0 per 30 minute period. After the temperature stabilizes for 30 minutes, maintain the temperature of -15^{0}F for 48 hours.

3.4.3.17 Check and record counters.

3.4.3.18 Adjust the temperature of the temperature chamber to ambient and perform tests 3.3.3.1, 3.3.3.15, 3.3.3.17, 3.3.3.18, 3.3.3.19, 3.3.3.20 and 3.3.3.21 of the characteristics test.

3.4.4 Appraisal of Test. When tested in accordance with 3.4, the overcurrent device shall:

3.4.4.1 Function properly at both temperature extremes operating a load equivalent to a size 9 D.C.

contactor without malfunction.

3.4.4.2 Characteristics measured after the test shall be within ± 10% of the originally measured values.

3.4.4.3 Counters recording the trips shall agree within ± ½ of 1%.

3.5 Failsafe Test

3.5.1 Purpose. The purpose of the test is to determine that the device will perform its intended function regardless of component failure.

3.5.2 Equipment required. The equipment necessary to perform the failsafe test is:

3.5.2.1 An AC or DC power supply to provide power to the overcurrent device.

3.5.2.2 A wire, #18 gauge approximately 12 inches long with spring clips to be used for shorting components.

3.5.2.3 One soldering iron, select wattage in accordance with circuity involved.

3.5.2.4 Solder 60/40.

3.5.2.5 Small pair of cutters.

3.5.2.6 Small pair of pliers.

3.5.3 Test

Caution: Safety glasses shall be worn at all times during this test. If soldering is necessary, remove control power first and then solder. After failure testing of a component, make sure the device operates before proceeding to the next component.

3.5.3.1 Install overcurrent relay in accordance with the manufacturers instructions and get it operating properly.

3.5.3.2 Inductors, transformers, resistors, except resistors used as shunts and lamps shall be failed in the open failure mode.

3.5.3.3 Semi conductor devices, surge suppressors and capacitors shall be individually failed in both the open and shorted failure mode.

3.5.3.4 Integrated circuits shall be individually failed in both the open and shorted failure modes in accordance with their design and

application in the circuit in which they are installed.

3.5.4 Appraisal of Test. When tested in accordance with the test procedures outlined in 3.5.3, the overcurrent relay shall:

3.5.4.1 Initiate a tripping function immediately or perform a tripping function in response to an overcurrent.

3.6 Energized Relay Test

3.6.1 Purpose. The purpose of this test is to assure that the overcurrent relay tripping relays are energized under normal operating conditions.

3.6.2 Equipment Required. The equipment required to perform the test is:

3.6.2.1 A mine duty circuit breaker with a 120V AC under voltage release.

3.6.2.2 An AC or DC power supply to provide power to the overcurrent relay.

3.6.3 Test.

3.6.3.1 Install and calibrate the overcurrent relay in accordance with the manufacturer's specifications and instructions in a test circuit that is electrically equivalent to the test circuit shown in Figure 1.

3.6.3.2 Connect the normally open contacts of the overcurrent relay in series with the circuit breaker's under voltage release and a power supply for providing power to the UVR.

3.6.3.3 Close the circuit breaker. (No power leads to breaker required.)

3.6.3.4 Disconnect control power to the overcurrent relay.

3.6.3.5 Record whether or not the circuit breaker tripped in step 3.6.3.4.

3.6.4 Appraisal of Test. When tested in accordance with the procedures outlined in 3.6.3, the overcurrent relay shall:

3.6.4.1 Cause the mine duty circuit breaker to trip when the overcurrent relay's control power is removed.

3.6.4.2 Failure is if the mine duty circuit breaker does not trip.

3.7 Maintaining Calibration Test.

3.7.1 Purpose. The purpose of this test is to assure that the device will hold its calibration to within ± 15% under adverse conditions as specified by CFR 30 Part 75.1001-1b.

3.7.2 Equipment required. The equipment required to perform the maintaining calibration test is:

3.7.2.1 A variable AC or DC power supply to provide power to the overcurrent device.

3.7.2.2 Time elapse meter with minimum specification of frequency ranges: CH A, O Hz (DC coupled) or 10 Hz (AC coupled) to 100 MHz, CH B, O Hz (DC coupled) or 10 Hz (AC coupled) to 10 MHz. Display accuracy, ± 1 count ± time-base accuracy. Maximum resolutions: FREQ A, 0.1 Hz at 10 microseconds GATE TIME: RATION A/B, $1/10^0$, average over 10^0 cycles; PERIOD B, 1 microseconds/cycle of B; TIME A B, 1 microseconds; TIME MANUAL 1 microseconds; TOTALIZE A, 1.

3.7.2.3 Oscilloscope with the capability of measuring frequencies of 20,000 hertz and voltages of 100 volts peak-to-peak.

3.7.2.4 A voltmeter.

3.7.2.5 A temperature chamber (same as 3.4.2.1).

3.7.2.6 A power supply to furnish overcurrent power.

3.7.3 Test.

3.7.3.1 Install and calibrate the overcurrent device in accordance with the manufacturer's specifications and instructions in a test circuit that is similar to field installation of the device.

3.7.3.2 Adjust input control voltage to overcurrent device to nominal as recommended by manufacturer and check calibration and record.

3.7.3.3 Set the trip point of the overcurrent device to minimum.

3.7.3.4 Reduce the input control voltage to the overcurrent device to 80% of nominal.

3.7.3.5 Apply overcurrent corresponding to minimum setting. Record.

3.7.3.6 Re-set the trip point of the overcurrent device to maximum.

3.7.3.7 Apply overcurrent corresponding to maximum setting. Record.

3.7.3.8 Increase the input control voltage to the overcurrent device to 120% of nominal.

3.7.3.9 Apply overcurrent corresponding to the maximum setting. Record.

3.7.3.10 Re-set the trip point of the overcurrent device to minimum.

3.7.3.11 Apply overcurrent corresponding to the minimum setting. Record.

3.7.3.12 Install overcurrent device in a temperature chamber capable of temperature from -26°C (-14°F) to 60°C (140°F).

3.7.3.13 Adjust the input control voltage to the overcurrent device to nominal.

3.7.3.14 Set the trip point on the overcurrent device to minimum.

3.7.3.15 Run the temperature in the chamber to -26°C (14°F) and permit sufficient time for stabilization.

3.7.3.16 Apply overcurrent corresponding to minimum setting. Record.

3.7.3.17 Adjust the set trip point to maximum and permit temperature to stabilize again.

3.7.3.18 Apply overcurrent corresponding to maximum setting. Record.

3.7.3.19 Run temperature in the chamber to 60°C (140°F) and permit sufficient time for stabilization.

3.7.3.20 Apply overcurrent corresponding to maximum setting. Record.

3.7.3.21 Adjust trip setting point to minimum setting and permit temperature to stabilize.

3.7.3.22 Apply overcurrent corresponding to the minimum setting. Record.

3.7.4 Appraisal of Test. The overcurrent device shall maintain its calibration by operating its tripping relay (or device) under each condition in the test. As an example: if set point is at 1000 AMPS, then for calibration to be maintained the device must trip for any value between 850 AMPS and 1151 AMPS. In this example, any value below 850 AMPS will not trip device.

3.8 Sensing Lead Test

3.8.1 Purpose. The purpose of this test is to determine if the overcurrent device will operate when the sensing leads are disconnected.

3.8.2 Equipment. The equipment required to perform the test is:

3.8.2.1 A variable AC or DC power supply to provide power to the overcurrent device.

3.8.2.2 A voltmeter.

3.8.2.3 A pair of rubber high voltage gloves.

3.8.3 Test.

3.8.3.1 Install and calibrate the overcurrent device in accordance with the manufacturer's specifications and instructions in a test circuit.

3.8.3.2 Apply power and be sure the trip relay is energized.

3.8.3.3 Using the high voltage gloves manually disconnect one of the sensing leads.

3.8.4 Appraisal of Test. When tested in accordance with 3.8.3, the overcurrent device shall:

3.8.4.1 Cause the tripping relay to de-energize when the sensing lead was disconnected.

3.9 Bidirectional Operations Test.

3.9.1 Purpose. The purpose of this test is to determine if the overcurrent device will open the circuit if current flows in either direction.

3.9.2 Equipment. The equipment required to perform the test is:

3.9.2.1 A variable AC or DC power supply to provide power to the overcurrent device.

3.9.2.2 A voltmeter.

3.9.2.3 Power supply to supply a signal to the overcurrent device.

3.9.3 Test.

3.9.3.1 Install and calibrate the overcurrent device in accordance with the manufacturer's specifications and instructions in a test circuit.

3.9.3.2 Apply power and be sure unit is correctly operating.

3.9.3.3 Increase current to overcurrent device until 50% of full load is obtained.

3.9.3.4 Turn power back to 0 and switch input leads to the device, e.g., positive lead goes to negative and negative lead goes to positive.

3.9.3.5 Increase current to overcurrent device until 50% of full load (in negative direction) is obtained. Note: device should trip with 50% negative potential.

3.9.3.6 Reduce current to overcurrent device to 0.

3.9.4 Appraisal of test. When tested in accordance with section 3.9.3, the overcurrent device must trip when 50% overcurrent is reduced in opposite polarity.

3.10 Voltage Transient Test.

3.10.1 Purpose. The purpose of this test is to determine if the overcurrent relay circuitry has been adequately protected against voltage transients.

3.10.2 Equipment required to perform the test is:

3.10.2.1 Overcurrent relay under test.

3.10.2.2 High power pulse generator capable of producing a pulse 9 times the nominal peak voltage for 1 to 10 microseconds with 250 ohms source impedance.

3.10.3 Test.

NOTE: If manufacturer provides adequate transient protection, this test can be waived.

3.10.3.1 Set up overcurrent relay according to the operating instructions provided by the

manufacturer, connect any test apparatus to the overcurrent relay.

3.10.3.2 Set up the pulse generator making connections to the overcurrent relay sensing lead and ground-to-case.

3.10.3.3 Adjust pulse generator to produce a pulse 9 times nominal peak voltage with a 1 microsecond width and use a one-slot manual trigger.

NOTE: Caution must be exercised during this test as high voltage is present. Investigator is advised to wear safety glasses and be aware that the overcurrent relay may explode. Watch for flying debris.

3.10.3.4 Energize the overcurrent relay with control power.

3.10.3.5 Apply 50% load on the overcurrent relay.

3.10.3.6 Energize pulse generator.

3.10.3.7 Press the one shot push button to give pulse.

3.10.3.8 Readjust pulse generator to produce a pulse 9 time nominal peak voltage but with a time of 10 microseconds width.

3.10.3.9 Press the one shot push button to give the pulse.

3.10.3.10 During steps 3.10.3.7 and 3.10.3.9, record any false trips.

3.10.4 Appraisal of Test. Failure of any component part of the overcurrent relay or false tripping, constitutes failure of this test.

Refer to Standard Test Procedure ETD-STP-0003-00

Appendix No. _____ to
Data Sheet 2

OVERCURRENT RELAY EVALUATION
LABORATORY TESTING CHECKLIST

Laboratory tests performed

Test Number

		Name	Date
3.3	Relay Characteristics Test		
3.4	Accelerated Life and Temperature Variation Test		
3.5	Failsafe Test		
3.6	Energized Relay Test		
3.7	Maintaining Calibration Test		
3.8	Sensing Lead Test		
3.9	Bi-Directional Operations Test		
3.10	Voltage Transient Test		

OVERCURRENT DEVICE CHARACTERISTIC TEST DATA SHEET

Application No._____ PAR No._____ Date_____
Company Name_____
OCR Trade Name _____ OCR Model No._____
Investigator_____

Nominal Input Voltage:_____ Minimum Input Voltage:_____

System Operating Voltage:_____ Specified Operating Range _____

Operating Time @ 115% S.P._____ 200% S. P. _____

Set Points (Nom. V)	Operating Points (Nom. V)
Min._____	_____
0.25_____	_____
0.50_____	_____
0.75_____	_____
1.00_____	_____

Set Points (80% Nom. V)	Operating Points (80% Nom. V)
Min._____	_____
0.25_____	_____
0.50_____	_____
0.75_____	_____
1.00_____	_____

Set Points (120% Nom. V)	Operating Points 120% Nom. V)
Min._____	_____
0.25_____	_____
0.50_____	_____
0.75_____	_____
1.00_____	_____

Comments_____
_____
_____

Tester_____ Date_____

ACCELERATED LIFE AND TEMPERATURE VARIATION TEST DATA SHEET

APPLICATION NO. _____ PAR NO. _____

COMPANY_____ Telephone _____

OCR TRADE NAME:_____ OCR MODEL NO._____

Install OCR in Temperature Chamber _____, see Figure 2 for typical connections.

Adjust input power supply to 120% of nominal _____.

Time in _____ Temperature at 200^0F _____ 72^0F _____

Check Characteristics _____% difference.

Connect equivalent loading to size 9 contactor.

Arrange timing circuit _____.

Set proper set point OCR _____.

Set temperature of chamber to 140^0F _____.

Set timers to zero and start counting.

Time in_____ Time out _____

Counter A _____ Counter B _____

Set temperature of chamber to -15^0F _____

Time in_____ Time out _____

Counter A _____ Counter B _____

Temperature to 72^0F _____

Check characteristics _____% difference.

Pass_____ Fail_____

Tester _____ Date_____

OVERCURRENT DEVICE
FAIL SAFE TEST
DATA SHEET

APPLICATION NO. _____ PAR NO. _____ DATE _____

COMPANY _____

OCR Trade Name _____ OCR Model NO. _____

1. Install OCR and calibrate according to manufacturers operating instructions.
2. Fail components and record below.

COMPONENT DESIGNATION	OPEN	SHORTED	OCR Tripping Relay CLOSED	OCR Tripping Relay OPEN

Tester Name: _____ Date: _____

Company Official: _____ Date: _____

Title _____

OVERCURRENT DEVICE
ENERGIZED RELAY TEST
DATA SHEET

Application No._____ PAR No._____ Date_____

Company Name_____

OCR Trade Name _____ OCR Model No._____

1. Install and calibrate OCR according to manufacturers specifications.

2. Connect the N.O. contacts of the OCR tripping relay in series (120 VAC) with the UV relay on a mine circuit breaker.

3. Apply control power and close the mine circuit breaker (no power leads required as UV relay on breaker is used only).

4. Disconnect control power to the OCR.

5. Circuit Breaker Tripped _____yes _____no.

Comments:_____

_____

_____

Tester Name_____ Date_____

OVERCURRENT DEVICE
MAINTAINING CALIBRATION TEST
DATA SHEET

Application No._____ PAR No._____ Date_____

Company Name_____

OCR Trade Name _____ OCR Model No._____

1. Install and calibrate the OCR according to the manufacturers specifications. Ambient temperature _____.
2. Set trip point on OCR to minimum _____.
3. Reduce input control voltage to 80% of nominal _____.
4. Apply overcurrent corresponding to minimum setting_____.
5. Set trip point on OCR to maximum_____.
6. Apply overcurrent corresponding to maximum setting _____.
7. Increase input control voltage to 120% of nominal _____.
8. Apply overcurrent corresponding to maximum setting _____.
9. Set trip point on OCR to minimum _____.
10. Apply overcurrent corresponding to minimum setting _____.
11. Install OCR in temperature chamber.
12. Adjust input control voltage to nominal _____.
13. Set trip point on OCR to minimum _____.
14. Run temperature in chamber to -15^0F.
15. Apply overcurrent corresponding to minimum setting _____.
16. Adjust trip point on OCR to maximum _____.
17. Apply overcurrent corresponding to maximum setting _____.
18. Run temperature in chamber to 140^0F.
19. Apply overcurrent corresponding to maximum setting _____.
20. Adjust trip point to minimum setting _____.
21. Apply overcurrent corresponding to minimum setting _____.

    Overcurrent Device

    Trip relay operated in each case _____.

    Pass _____ Fail _____

Tester _____ Date _____

OVERCURRENT DEVICE
SENSING LEAD TEST
DATA SHEET

Application No._____ PAR No._____ Date_____

Company Name_____

OCR Trade Name _____ OCR Model No._____

1. Install and calibrate the OCR according to the manufacturer's specifications.

2. Apply control power (nominal), temp. ambient and be sure the trip relay is energized.

3. Disconnect one of the sensing leads.

   Did trip relay drop out? _____ yes _____no

   Pass _____ Fail _____

4. Re-connect sensing lead.

5. Disconnect other sensing lead.

   Did trip relay drop out? _____ yes _____no

   Pass _____ Fail _____

Comments:_____

_____

_____

Tester _____ Date _____

OVERCURRENT DEVICE
BI-DIRECTIONAL OPERATIONS TEST
DATA SHEET

Application No._____ PAR No._____ Date_____

Company Name_____

OCR Trade Name _____ OCR Model No._____

1. Install and calibrate the OCR.
2. Set dial indicator for mid-range _____.
3. Apply 50% load setting current _____.
4. Turn power back to 0 load and change sensing leads _____.
5. Apply power to OCR to 50% load setting current _____.
6. Reduce power to 0 load.
7. OCR trip relay action _____ (opposite polarity load).

Pass _____ Fail _____

Comments_____

_____

_____

Tester _____ Date _____

OVERCURRENT DEVICE
VOLTAGE TRANSIENT TEST DATA SHEET

Application No._____ PAR No._____ Date_____
Company Name_____
OCR Trade Name _____ OCR Model No._____

Transient suppression protection is _____ is not _____ provided for this overcurrent device.
NOTE: If it is not provided, this test shall be conducted.

1. Set up high voltage pulse generator to produce a pulse 9 times nominal peak voltage with a one (1) microsecond width.
2. Connect pulse generator to sensing lead terminal and the case.
3. Energize overcurrent device (input voltage).
4. Apply 50% load on overcurrent device.
5. Energize pulse generator. Press trigger.
6. De-energize both OCR and pulse generator.
7. Inspect OCR internally to check for damage. Yes ____ No ____
8. If no damage is found reassemble OCR and proceed.
9. Readjust pulse generator to produce a pulse 9 times nominal peak voltage but with a time of 10 microseconds width.
10. Energize OCR (input voltage).
11. Apply 50% load on overcurrent device.
12. Energize pulse generator. Press trigger.
13. Record any false trips _____.
14. De-energize OCR and pulse generator.
15. Inspect OCR internally to check for damage. Yes____ No ____.
16. Reconnect OCR and test for proper operation.

False trips _____ Failure of components _____

Pass _____ Fail _____

Comments _____

_____

Tester _____ Date _____

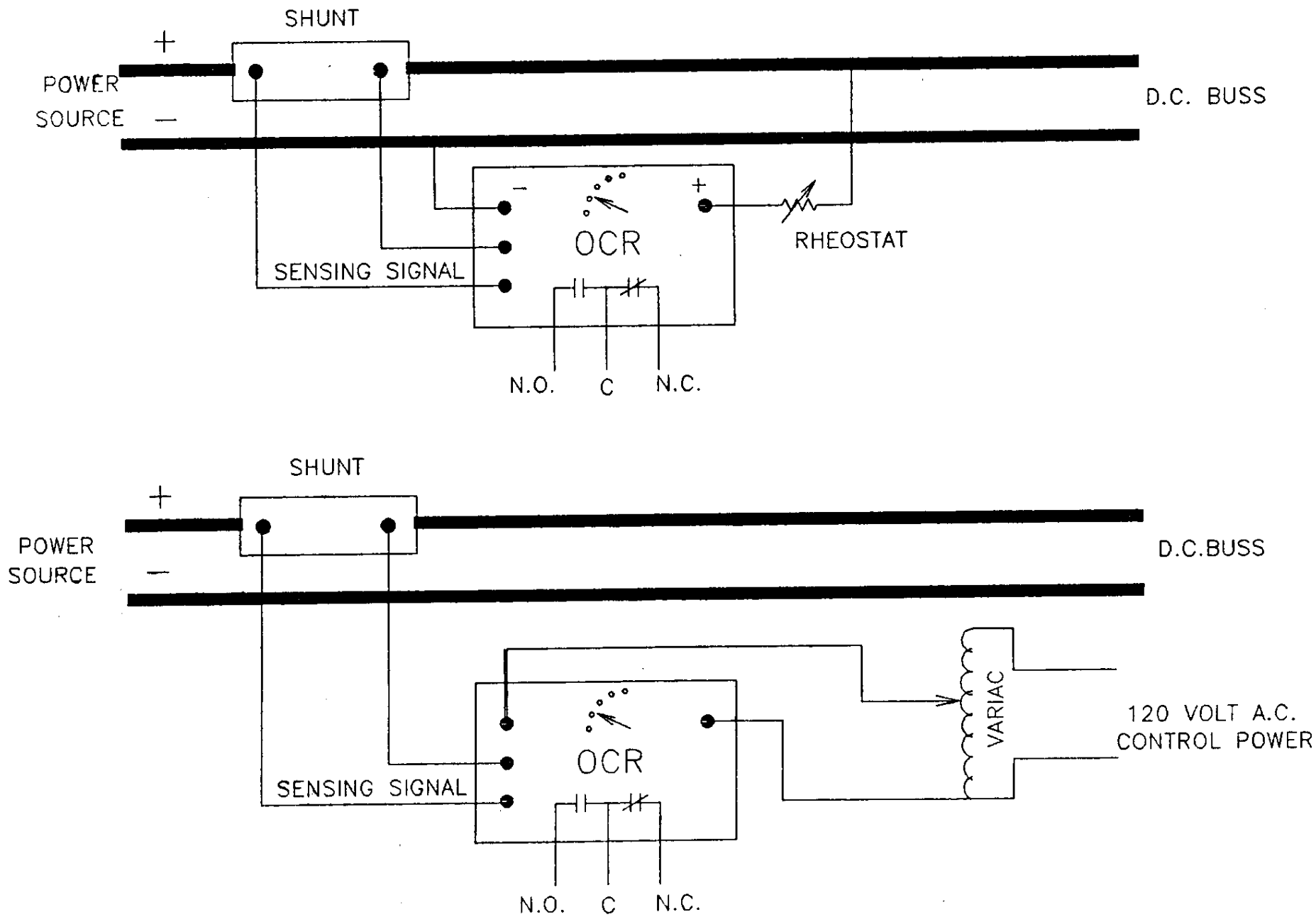

FIGURE 1 OVERCURRENT RELAY CHARACTERISTICS TEST

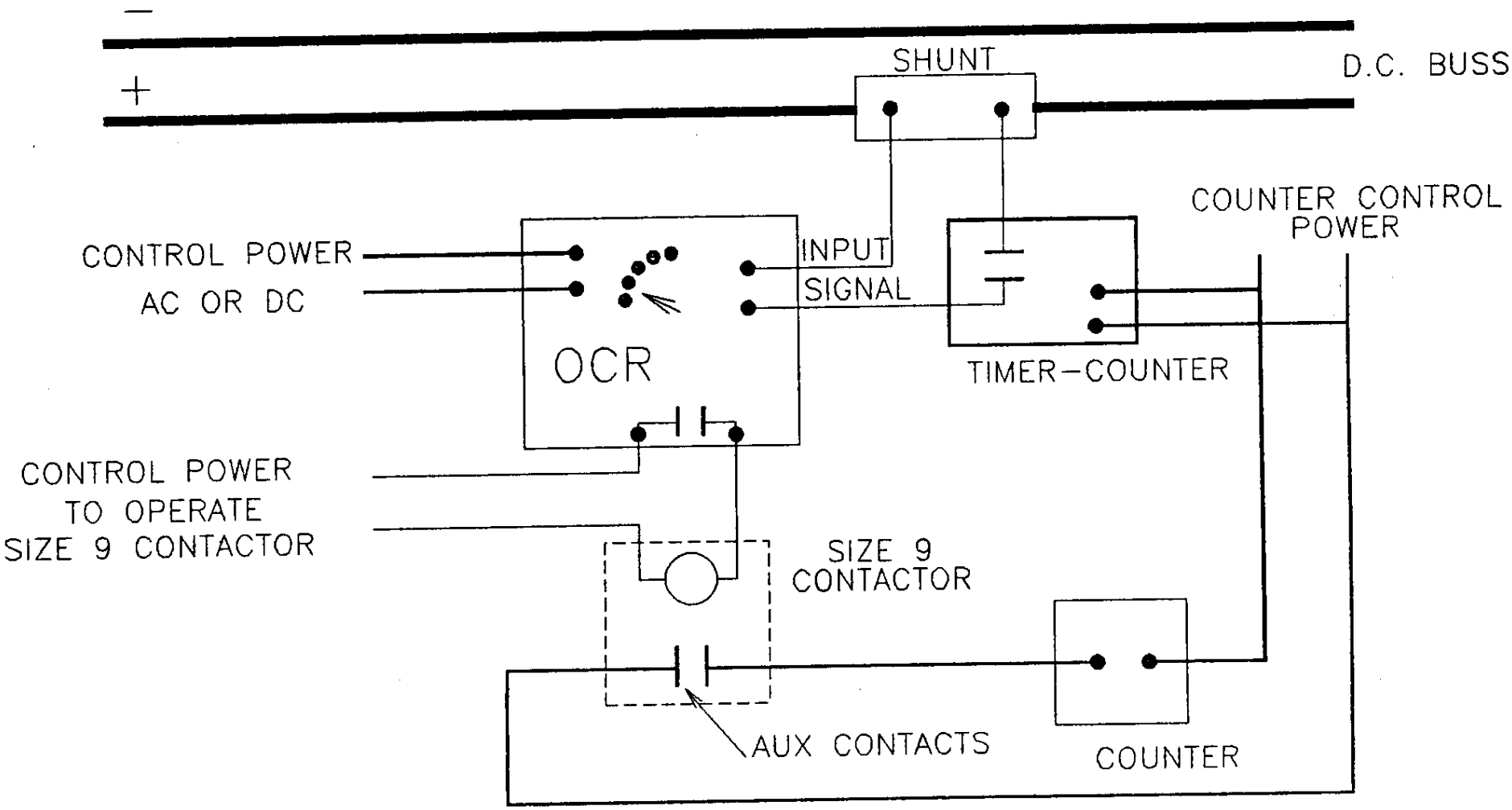

FIGURE 2 ACCELERATED LIFE TEST