federal register

Friday
October 25, 1996

Part III

Department of Labor

Mine Safety and Health Administration

30 CFR Parts 7, et al.

Approval, Exhaust Gas Monitoring, and Safety Requirements for the Use of Diesel-Powered Equipment in Underground Coal Mines; Final Rule

DEPARTMENT OF LABOR

Mine Safety and Health Administration

30 CFR Parts 7, 31, 32, 36, 70, and 75

RIN 1219–AA27

Approval, Exhaust Gas Monitoring, and Safety Requirements for the Use of Diesel-Powered Equipment in Underground Coal Mines

AGENCY: Mine Safety and Health Administration, Labor.

ACTION: Final rule.

SUMMARY: This final rule establishes new requirements for the approval of diesel engines and other components used in underground coal mines; requirements for monitoring of gaseous diesel exhaust emissions by coal mine operators; and safety standards for the use of diesel-powered equipment in underground coal mines. The final rule is derived in part from existing MSHA regulations, and provides protection against explosion, fire, and other safety and health hazards related to the use of diesel-powered equipment in underground coal mines. The final rule also amends certain equipment safety standards in part 75 previously applicable only to electric-powered equipment to apply to diesel-powered equipment. The new standards are consistent with advances in mining technology, address hazards not covered by existing standards, and impose minimal additional paperwork requirements.

EFFECTIVE DATES: This regulation is effective April 25, 1997, except for subparts E and F of part 7, the removal of part 31, the amendments to part 36, and § 75.1907 which are effective November 25, 1996. Incorporations by reference were approved by the Director of the Federal Register as of April 25, 1997.

FOR FURTHER INFORMATION CONTACT: Patricia W. Silvey, Director, Office of Standards, Regulations, and Variances, Mine Safety and Health Administration, 4015 Wilson Boulevard, Arlington, VA 22203–1984. Ms. Silvey can be reached at psilvey@msha.gov (Internet E-mail), 703–235–1910 (voice), or 703–235–5551 (facsimile).

SUPPLEMENTARY INFORMATION:

I. Background

Coal mine operators began to introduce diesel-powered equipment into underground mines in the early 1970's. The number of diesel units operating in underground coal mines has increased from approximately 150 in 1974 to over 2,900 units operating in 173 mines in 1995. MSHA projects that the number of diesel units operating in underground coal mines could increase to approximately 4,000 in 250 underground coal mines by the year 2000.

Although diesel-powered equipment does not have the inherent electrocution hazard of electric-powered equipment, it nonetheless presents a number of safety and health risks. By introducing an internal combustion engine into an environment where explosive levels of methane can be present, diesel-powered equipment brings with it risks of fire or explosion. Diesel engines also have high temperature exhaust components which, in the presence of coal and other combustibles in the underground mine environment, present a fire hazard. The handling and storage of diesel fuel underground also present potentially serious fire hazards. Finally, diesel engines produce exhaust gases containing carbon monoxide, oxides of nitrogen, and particulate matter, presenting potentially serious health risks to miners.

Before publication of this final rule, MSHA's regulations contained limited safety and health and machine approval requirements that specifically addressed the use of diesel-powered equipment in underground coal mines. In the 1980's, the increase of the numbers of this equipment in underground coal mines, coupled with the health and safety risks associated with its use, highlighted the need for a regulatory approach specifically tailored to diesel-powered equipment operated in underground coal mines.

In response to this need, the Secretary of Labor convened a Federal advisory committee in 1987 to evaluate and make recommendations for the safe and healthful use of diesel-powered equipment in underground coal mines. The Diesel Advisory Committee addressed approval issues—covering equipment design and performance; use issues—addressing the safe use of diesel equipment in the mine environment; and health issues—concerning the evaluation and control of health hazards associated with diesel equipment. In July 1988, the Committee issued a report of its recommendations entitled ''Report of the Mine Safety and Health Advisory Committee on Standards and Regulations for Diesel-Powered Equipment in Underground Coal Mines''. In its report the Committee concluded that MSHA should develop regulations to govern the approval and use of diesel-powered equipment in underground coal mines, and identified a number of specific areas to be addressed.

On October 4, 1989, the Mine Safety and Health Administration published a Notice of Proposed Rulemaking in the Federal Register [54 FR 40950] that included criteria for the approval of diesel engines and other related equipment; addressed exposure limits, monitoring, and recordkeeping requirements for certain diesel emissions; and provided corresponding safety standards for the use of diesel-powered equipment in underground coal mines, including the safe storage and transport of diesel fuel, and the training of persons performing work on diesel equipment. On the same day, MSHA also published an Advance Notice of Proposed Rulemaking [54 FR 40996] soliciting comment on the approach and scope of an MSHA approval program for diesel machines. MSHA held four public hearings on the proposed rule: in Salt Lake City, Utah; Pittsburgh, Pennsylvania; Chicago, Illinois; and Birmingham, Alabama.

This final rule, which includes specifications for the approval of diesel engines as well as provisions for the safe and healthful use of such equipment in underground coal mines, is derived from the data, information, and public comments compiled during the rulemaking process. The final rule, like the proposal, takes an integrated approach to the control of diesel safety and health hazards, requiring clean-burning engines on diesel-powered machines, maintained by persons who have been adequately trained for the task. Sufficient ventilating air is required where diesel-powered equipment is operated to control the potential health hazards of diesel exhaust. Sampling every shift confirms the effectiveness of the mine ventilation system in addressing these hazards.

Part 7 Equipment Approval

MSHA regulations require the Agency's approval of the design of electrical equipment to be used in the production areas of underground coal mines. This equipment must be designed to eliminate fire and explosion hazards. MSHA's approval program has been very successful in reducing the number of fires, explosions and other hazards associated with electric-powered equipment. The final rule establishes a similar approach for diesel-powered equipment used in areas of underground coal mines where permissible (explosion-proof) electric equipment is required, ensuring the same level of safety in mines where diesel-powered equipment is used.

The permissibility requirements for diesel-powered equipment used in gassy non-coal mines in MSHA's part 36 regulations have been in place for a number of years. Although specific regulations did not exist for diesel-powered equipment operated in underground coal mines, MSHA has used the ventilation plan approval process to require the use of permissible diesel-powered equipment, approved under part 36, in those areas of underground coal mines where permissible electric equipment is required. However, mine ventilation plans have generally only addressed fire and explosion protection for equipment operating near the point of coal extraction (inby), and other locations where methane may be present, and have not addressed other possible safety hazards associated with the use of diesel-powered equipment in other (outby) areas. Additionally, mine ventilation plans have not dealt with such important concerns as the storage and handling of diesel fuel and regular maintenance of diesel equipment.

The final rule requires that only approved engines be used in diesel-powered equipment in underground coal mines, and establishes approval requirements for diesel engines to be used in both permissible areas (inby) and nonpermissible areas (outby) under part 7, subpart E. The subpart E approval requirements are modeled after existing approval requirements in part 36 for engines used in gassy non-coal mines. Certain other safety features, such as flame arresters, spark arresters, and water scrubbers, must be added to the engines used in permissible areas to ensure that they can be operated safely in the coal mine environment. An engine in combination with these safety features is termed a diesel power package. A separate approval was established in the final rule for the power package because the power package manufacturer is normally a company other than the engine manufacturer and controls the assembly of the power package. In addition, approval requirements for power packages under part 7, subpart F, are incorporated into machines approved under existing part 36. This is similar to the approach taken for electrical equipment where explosion-proof components are incorporated into machines approved under part 18.

In order to protect miners from harmful contaminants emitted from diesel engines, the approval requirements in the final rule contain test procedures and limits on the concentrations of carbon monoxide and oxides of nitrogen. Based on commenters' recommendations, the final rule requires that the same test cycle be used for testing both the gaseous and particulate emissions. In response to commenters' recommendations, the final rule is based on ISO 8178, an international consensus standard, which establishes a common test cycle for the measurement of gaseous and particulate emissions. All equipment testing under part 7 is intended to be conducted at test sites other than MSHA facilities, such as manufacturers' laboratories, independent testing laboratories, or other government or university laboratories.

Part 70 Exhaust Gas Monitoring.

The final rule addresses the monitoring and control of gaseous diesel exhaust emissions. The final rule requires area sampling as part of the onshift examination during every work shift. These monitoring provisions will ensure, in a reliable and systematic manner, that miners will be protected from exposure to harmful levels of gaseous contaminants.

The final rule requires that mine operators take representative samples of carbon monoxide and nitrogen dioxide in strategic locations to determine concentrations of these contaminants in miners' workplaces. The sampling locations are based on knowledge of the specific operation of diesel equipment underground and the behavior of gaseous emissions generated by these machines. Samples exceeding an action level of 50 percent of the threshold limit values (TLV®) for carbon monoxide and nitrogen dioxide trigger corrective action by the mine operator.

Part 75 Safety Requirements

The final rule specifies minimum ventilating air quantities in areas where diesel equipment is operated, and requires that the quantities be incorporated into the mine operator's approved mine ventilation plan. As part of the equipment approval process in part 7 of the final rule, diesel engines used underground are tested for gaseous and particulate emissions. The required minimum ventilating air quantity is determined based on the results of these emission tests and is included on the approval plate for each unit of diesel-powered equipment. The approval plate quantity of ventilating air is the air quantity needed to dilute the exhaust gases to their permissible exposure limits. This air quantity should be used in ventilation system design by the mine operator and in the evaluation and approval of minimum air quantities in ventilation plans by MSHA.

Under the final rule individual units of diesel equipment must be ventilated, as a general rule, with the air quantity specified on the equipment's approval name plate. The quantity of air required in areas where multiple units of equipment are operated is based on a simple addition of approval plate air quantities. The final rule also allows for adjustments in air quantities for multiple units of equipment, if sampling of contaminants indicates that lesser air quantities will result in dilution to the necessary levels. In addition, the final rule establishes specific locations where air quantities must be measured.

Under the final rule, low sulfur fuel must be used to operate diesel-powered equipment underground. Low sulfur fuel, which is readily available and widely used throughout the United States, will lower gaseous and particulate emissions, helping to protect miners from exposure to harmful diesel exhaust contaminants. In addition, the final rule prohibits the use of flammable liquids as additives in diesel fuel used underground and requires that only additives registered with the Environmental Protection Agency in accordance with 40 CFR Part 79 be used in diesel-powered equipment.

The use of diesel fuel underground can present risks to miners' safety, because the spilling of fuel on hot surfaces or electric components, or the inadvertent ignition of stored diesel fuel, can result in fire. Additionally, a fire started with a combustible material other than diesel fuel that then spreads to diesel fuel stored underground could be catastrophic. Diesel fuel handling and storage are addressed in the final rule by specific requirements for diesel fuel storage and the transportation of fuel from one location to another.

New design, installation, and maintenance requirements are established under the final rule for fire suppression systems installed on diesel-powered equipment and fuel transportation units. The requirements in the final rule address the risk of fire on diesel-powered equipment caused by, for example, hot exhaust components, dragging brakes, and shorted electrical components igniting diesel fuel, hydraulic fluid, brake fluid, lube oil, and other combustible materials. The final rule also requires that automatic fire-suppression systems be listed or approved by a nationally recognized independent testing laboratory.

The final rule recognizes that regular maintenance of diesel-powered equipment is essential. Inadequate equipment maintenance can result in the creation of a fire or explosion

hazard, and the levels of harmful gaseous and particulate components in diesel exhaust can rise when equipment is not adequately maintained. In response, the final rule requires diesel-powered equipment to be examined on the same weekly basis as electric equipment. The rule specifically requires that air filters be changed and scrubbers be flushed regularly, and that weekly gaseous emission tests be conducted on certain diesel equipment while the engine is operating. The final rule also requires that persons performing certain work on diesel-powered equipment be qualified. Commenters agreed that requiring diesel-powered equipment to be maintained in approved condition is necessary to ensure that features installed to reduce the risk of fire, explosion, and harmful emissions are operating properly. The final rule does not adopt the proposal that MSHA approve the training plans used for qualification. Under the final rule, training to establish qualification for persons performing maintenance may be obtained through the equipment manufacturer, community colleges, training schools, or other training providers.

Amendments to Existing Part 75 Requirements

The final rule amends certain existing MSHA regulations in part 75 by extending their applicability to diesel-powered equipment. The final rule requires that certain types of diesel-powered equipment be equipped with methane monitors to detect dangerous levels of methane, and also with cabs or canopies to protect miners from roof falls. Additionally, the final rule clarifies that accumulation of coal dust and other combustible materials is prohibited on diesel-powered equipment. These safety features have been proven to save miners' lives.

II. Discussion of the Final Rule

A. General Discussion

Recordkeeping Requirements in the Final Rule

Recordkeeping requirements in the final rule are found in §§ 7.83 and 7.97, Application requirements; §§ 7.90 and 7.105, Approval marking; §§ 7.108, Power package checklist; § 75.363, Hazardous condition; posting, correcting and recording; § 75.371 (r), (kk), (ll), (mm), (nn), (oo), and (pp), Mine ventilation plan, contents; § 75.1901(a), Diesel fuel requirements; § 75.1904(b)(4)(i), Underground diesel fuel tanks and safety cans; § 75.1911(i) and (j), Fire suppression systems for diesel-powered equipment and fuel transportation units; § 75.1912(h) and (i), Fire suppression systems for permanent underground diesel fuel storage facilities; § 75.1914 (f)(1), (f)(2), (g)(5), (h)(1) and (h)(2), Maintenance of diesel-powered equipment; § 75.1915(a), (b)(5), (c)(1), and (c)(2), Training and qualification of persons working on diesel-powered equipment.

The paperwork burden imposed on manufacturers by the final rule totals 558, which is an increase of 790 burden hours for the transfer of hours from part 36 approval requirements, and a decrease of 232 hours for the removal of parts 31 and 32. In the first year the final rule is in effect, the burden hours on mine operators will be 56,258, of which large and small mine operators will incur 54,774 and 1,484 hours, respectively. After the first year, the burden hours to mine operators will be 52,228, of which large and small mine operators will incur 50,949 and 1,279 hours, respectively.

In the first year that the final rule is in effect, the total new paperwork burden hours to mine operators and manufacturers will be 56,816 [56,258 + (790 − 232)]. After the first year, the total new paperwork burden hours to mine operators and manufacturers will be 52,786 [52,228 + (790 − 232)].

MSHA solicited comments regarding the burden estimates or any other aspect of the collection of information in the proposed rule. Proposed paperwork requirements were submitted to the Office of Management and Budget (OMB) for review in accordance with section 3504(h) of the Paperwork Reduction Act of 1980 (PRA 80). Comments by OMB were filed under comment numbers 1219–0111, 1219–0112, and 1219–0114. Control number 1219–0100 was approved for proposed paperwork burden hours required by part 7.

When proposed in 1989, the information collection requirements in the diesel equipment regulations were calculated under PRA 80. The final rule calculations are done in compliance with the Paperwork Reduction Act of 1995 (PRA 95). Generally, changes in the final rule burden hour and cost estimates from the proposed requirements result from the revision necessitated by PRA 95. When the change represents a regulatory change, it is so noted in the discussion of the appropriate section within the preamble. For details on the calculation of paperwork hours and costs see ''VII, Paperwork Reduction Act of 1995'' in the Regulatory Impact Analysis, which may be accessed electronically or may be requested from MSHA's Office of Standards, Regulations, and Variances.

Information is to be recorded, maintained for the period specified, and made accessible, upon request, to authorized representatives of the Secretary and to miners' representatives. Records are to be stored in a manner that is secure and not susceptible to alteration, to preserve the integrity of records for review by interested parties. This may be done traditionally, by recording in a book, or electronically by computer.

Examples of books that MSHA considers to be secure and not susceptible to alteration include, but are not limited to, record books that are currently approved by state mine safety agencies, and permanently bound books. Examples of books that would not be considered secure include loose-leaf binders and spiral notebooks.

Recognizing the trend of electronic storage and retrieval of information through computers to be an increasingly common business practice, MSHA permits the use of electronically stored records, provided that they are secure and not susceptible to alteration, that they are able to capture the information and signatures required, and that information is accessible to authorized representatives of the Secretary and miners' representatives. ''Secure'' is intended to mean unalterable or unable to be modified. An example of acceptable storage would be a ''write once, read many'' drive. Electronic records meeting these criteria are practical and as reliable as traditional records. Although the final rule does not require backing up the data, some means is necessary to ensure that the condition and existence of electronically stored information is not compromised or lost.

The 1995 Paperwork Reduction Act mandates agencies to encourage the use of electronic submission of responses to minimize the burden of the collection of information on respondents. Likewise, one of the major objectives of Executive Order No. 12866 is to make the regulatory process more accessible and open to the public as a means to reduce the duplication of information between agencies. Elsewhere in this preamble, MSHA announces the electronic availability of its rulemaking documents with access instructions. The mining community and other interested parties are encouraged to access on-line material as needed.

B. Section-by-Section Discussion

The following section-by-section portion of the preamble discusses each provision affected. The text of the final

rule is included at the end of the document.

General Discussion of Diesel Equipment Approvals and Safety Requirements

One of the three major areas addressed by the Diesel Advisory Committee was the approval of diesel-powered equipment. Historically, MSHA and its predecessor agencies have approved equipment intended for use in areas of mines where methane and other substances pose the danger of a fire or explosion. Through the approval process, equipment is evaluated against technical requirements which, when met, will render the equipment safe for its intended use in the mine environment. In part as a result of this process, the approved equipment used in mines in the United States is recognized as among the safest in the world.

The Advisory Committee recommended that diesel-powered equipment for use in underground mines be subject to MSHA approval in much the same way that electrical equipment has been regulated. Under existing standards, electrical equipment operated in the area of extraction and in return airways of underground coal mines and gassy metal and nonmetal mines, where methane may accumulate, must be approved as permissible (explosion-proof). Electrical equipment operated elsewhere in these mines is not required to be permissible, but is subject to certain safety requirements to protect against fire, shock, and other hazards of operation. The Advisory Committee further recommended:

- Only diesel-powered equipment currently considered permissible should be permitted to continue to operate in areas of coal mines where permissible electrical equipment is required.
- Separate specifications should be developed for diesel-powered equipment used in areas where permissible equipment is required and elsewhere.
- An approval program for diesel-powered equipment and portable, attended equipment should be established. This program should identify those equipment design features most readily addressed by the equipment manufacturers.
- A time schedule should be developed to allow for conversion of outby equipment presently in use through retrofits, replacement, or additional interim safety features to meet the applicable new requirements.
- Equipment newly introduced underground after a fixed date should meet the new standards.
- Current safety requirements including those that are applicable to electric equipment should apply to diesel equipment as appropriate.
- Only approved diesel engines should be used in underground equipment and the approval requirements should include measurements of exhaust gas pollutants and determination of a nameplate airflow quantity. Measurement of particulate generation should also be included in the engine approval process.

In the proposed rule, MSHA outlined three new subparts for existing part 7, which set approval requirements for diesel engines and power packages to be used in underground coal mines. The Agency also gave notice of its intention to develop approval requirements for fully assembled diesel-powered machines under a proposed subpart H for permissible equipment and subpart I for large outby equipment. Requirements for a limited class of light-duty equipment and stationary unattended equipment were proposed in part 75. A special class of equipment consisting of ambulances and fire fighting equipment was proposed that could be used in emergency situations as part of the mine's evacuation plan. The proposal also included provisions to permit fire prevention features in lieu of surface temperature controls for diesel locomotives.

Currently, MSHA approves diesel equipment under 30 CFR Part 36 for use in ''gassy noncoal mines''. In underground coal mines, ventilation plans specify the use of diesel-powered equipment approved as permissible under part 36 in areas where permissible electric equipment is required. In addition to the equipment approval under part 36, MSHA regulations address the approval of diesel mine locomotives in 30 CFR Part 31, and of mobile diesel-powered equipment for noncoal mines in 30 CFR Part 32. The proposal suggested that parts 31, 32, and 36 could be revised or revoked, and solicited comment. Some commenters favored retaining all of the existing diesel approval regulations since they still could have some application for equipment used in metal and nonmetal mines. Commenters generally agreed that the proposed rules for part 7 should supersede any applicability these existing approval regulations have for diesel engines used in underground coal mines.

The final rule for part 7 governs the approval of diesel engines intended for use in underground coal mines. As recommended by the Advisory Committee and as set forth in the proposed rule, the final rule requires that all diesel engines used in underground coal mines be approved.

Part 7 was originally promulgated in 1988 to establish application procedures and requirements for MSHA approval of certain products for use in underground mines, with testing conducted by the applicant or a third party. Traditionally, MSHA's role in approving products for safety emphasized testing by the Agency. Under part 7, testing is performed by the applicant or by a third party selected by the applicant, with MSHA maintaining the right to observe product testing. This approach has permitted MSHA to focus on its product audit function and keep pace with technological improvements in mining products.

As originally promulgated, part 7 applied to only two types of products: brattice cloth and ventilation tubing under subpart B, and battery assemblies under subpart C. Subsequently, three additional subparts were developed covering multiple-shot blasting units; electric motor assemblies; and electric cables, signaling cables, and cable splice kits. As designed, part 7 expedites the approval process, while providing greater assurance that the products are manufactured in accordance with safety specifications.

The final rule for part 7 is organized into two subparts—E and F. Subpart E sets diesel engine performance and exhaust emission requirements. As more fully discussed elsewhere in the preamble, subpart E creates two classes of engine approvals—one for Category A engines and one for Category B engines. Engines intended for use where permissible electric equipment is required in underground coal mines must have a Category A approval; engines for use elsewhere in underground coal mines must meet the requirements for Category B engines.

Subpart F of the final rule sets standards for safe design of diesel engines with respect to both fire and explosion hazards. The final rule establishes requirements for approval of diesel ''power packages'' on engines intended to be used where electric equipment is required to be permissible under existing standards. The term ''power packages'' refers to an approved engine and those components added to the engine, such as flame arresters, which prevent the ignition of methane, and surface temperature controls, which prevent the ignition of accumulations of combustible materials and combustible liquids. Permissible equipment is designed to be explosion-proof.

Subpart G of the proposed rule would have established requirements for diesel

power packages intended for use in areas of underground coal mines where permissible electrical equipment is not required. As this equipment is not designed to be operated in a potentially explosive methane environment, the proposed rule would not have required these power packages to have explosion-proof features. However, these diesel engines do present fire hazards which must be controlled. Under the proposal, subpart G would have set standards for surface temperatures, exhaust cooling, and safety system controls. As discussed more fully below, the final rule does not retain subpart G, but addresses these hazards through new requirements in part 75.

The proposed rule, responding to a recommendation of the Advisory Committee, also established a category of ''limited class of light-duty diesel-powered equipment.'' This category included machines with light-duty cycles, such as pickup trucks and personnel carriers. This equipment, while light-duty as compared to production equipment, can, nevertheless, present a fire hazard. For this ''limited class'' of diesel-powered equipment, instead of requiring surface temperature controls, the proposal set standards for fire prevention features that would prevent fuel, hydraulic fluid, and lubricants from coming into contact with hot engine surfaces. Features such as special fuel system protection, fire suppression systems, safe electrical systems, and engine compartment sensors that shut down the engine in the event of overheating were specified in the proposal for additional fire protection. Other necessary safety features, such as braking systems, were also addressed by the proposal. As recommended by the Advisory Committee, these requirements were not made part of the approval process described above, but were set forth in the proposal as safety standards for underground coal mines, appearing in 30 CFR Part 75.

The final rule retains many of the provisions of the ''limited class'' concept in the proposal, but broadens the scope of the equipment subject to these requirements to include all equipment not required to be permissible (outby equipment). This change eliminates the need for formal approval of outby equipment, and simplifies the final rule. This aspect of the final rule, and the diesel-powered equipment approval requirements, are discussed in detail under the section-by-section analysis which follows.

In the proposed rule MSHA notified the public of its intentions to develop two new approval regulations. Subpart H would have established requirements for the approval of fully assembled permissible diesel-powered equipment, and subpart I would have established approval requirements for fully assembled nonpermissible diesel-powered equipment. These sections would have included machine features currently required by part 36 for permissible equipment and similar features, described above, for ''limited class'' equipment. These subparts would have required the incorporation of appropriate power packages as described in proposed subparts F and G.

In the advance notice of proposed rulemaking, which accompanied the proposed rule, MSHA requested comments on this regulatory approach. Commenters objected to a formal approval program for nonpermissible equipment, but supported the incorporation of machine safety features in the use requirements specified in part 75. Commenters also supported the need for continuing the approval program for permissible equipment.

In response to these comments, the final rule retains part 36 as the basis for the approval program for permissible diesel-powered equipment and adopts the machine safety features specified for the limited class of light-duty equipment in the proposal for all nonpermissible equipment. Subparts H and I are not further developed. Instead, the final rule adopts the fire prevention features specified for limited class equipment for all nonpermissible equipment. Additionally, the final rule enhances the fire prevention features that now apply to all nonpermissible equipment. This approach eliminates the need for subpart G of the proposal dealing with power packages for outby equipment.

The final rule makes certain revisions to part 36 to update and make these existing requirements more flexible. The final rule revises part 36 to remove references to ''gassy noncoal mines and tunnels'', thus making these existing regulations applicable to equipment intended for use in coal as well as in metal and nonmetal mines. In addition, part 36 is amended to afford equipment manufacturers the option of incorporating in equipment submitted for approval either a part 7, subpart F power package, or engine and safety component systems that meet the existing requirements of part 36. Under the final rule, part 36-approved equipment with a part 7, subpart F power package will be suitable for use in underground coal mines where permissible electrical equipment is required. Part 36 equipment with engine and safety component systems certified under part 36 will continue to be recognized for use in metal and nonmetal mines where permissible equipment is required.

These changes are responsive to commenters who recommended that part 36 continue to be utilized for approving diesel-powered equipment. The final rule revisions to part 36 also retain, as recommended by commenters, a distinction between approval requirements for equipment used in coal mines and approval requirements for metal and nonmetal mining equipment.

The final rule revokes parts 31 and 32. MSHA previously identified these regulations for elimination in its response to the President's March 4, 1995, Regulatory Reform Initiative. Parts 31 and 32 are outdated and, with the final rule changes to parts 7 and 36, are obsolete. Only nine approvals have been issued under part 31 since its inception, and none have been issued since 1977. No other MSHA standards require part 31-approved equipment, and diesel mine locomotive manufacturers have submitted approval applications under part 36 for locomotives intended to be used where permissible equipment is required. With the revocation of part 31, diesel mine locomotive manufacturers may continue to acquire equipment approvals under part 36.

The part 32 approval requirements for mobile diesel-powered equipment used in noncoal mines are likewise unnecessary. No MSHA regulation requires the use of part 32 equipment, and no part 32 machine approval has been issued since 1981. Part 32 engine certifications have continued to be issued by MSHA, however, and some state and federal agencies' regulations make reference to part 32. State and federal agencies that reference part 32 are directed to look to part 7, subpart E, which contains engine requirements, and to §§ 75.1909 and 75.1910, which contain the requirements for other machine features. Together, these final standards cover the requirements previously found under part 32. These new sections of the final rule will continue to accommodate those government agencies that reference MSHA approval or certification regulations.

Likewise, manufacturers seeking part 32 engine approvals will be able to acquire the requisite engine approval through the new part 7, subpart E. Existing part 32 engine approvals continue to be valid.

A significant issue for the Advisory Committee and in the proposal was the schedule set for compliance with the new standards for diesel-powered equipment. The Advisory Committee

recommended that MSHA require diesel equipment newly introduced underground to meet the new standards after a certain date. The Committee further recommended that MSHA set a schedule for existing diesel equipment to meet any new requirements.

The proposal called for the part 7 approval requirements to be effective 60 days after publication of the final rule. The schedule for requiring in-mine use of diesel equipment meeting the new requirements was set by proposed § 75.1907. Under these provisions, the new requirements would have been met over a schedule ranging from six months to five years after the effective date of the final rule.

The final rule follows the approach of the proposal, setting effective dates for the new approval requirements, as well as the schedule for requiring in-mine use of diesel-powered equipment which meets the new requirements. In response to the comments and as a result of not adopting proposed subparts G, H, and I, the final rule sets a compliance schedule ranging from 60 days to three years after publication of the final rule. In order to facilitate implementation of the final rule, MSHA will begin accepting approval applications under revised parts 7 and 36 immediately. In addition, MSHA will continue power package testing until the Agency determines that a competitive capacity exists in the private sector. At that time, MSHA will discontinue power package testing and rely solely on the part 7 testing provisions.

Subpart E Overview

Subpart E of the final rule is new and amends existing part 7. As an amendment to these existing regulations, the general administrative provisions of subpart A of part 7 apply to the new subpart E application requirements.

Subpart E establishes engine performance and exhaust emission requirements for MSHA approval of diesel engines for use in underground coal mines. As discussed elsewhere in this preamble, diesel engines for use in metal and nonmetal mines are approved under part 36.

The final rule, like the proposal, creates two classes of engine approvals—Category A and B—for diesel engines to be used in underground coal mines. Several commenters objected to the proposed approval of diesel engines for use in outby areas, noting that outby electrical equipment is not subject to approval under existing standards. However, other commenters stated, and the Diesel Advisory Committee acknowledged, that all diesel engines in underground coal mines should meet certain safety and performance specifications. In its report the Advisory Committee suggested that, depending on equipment location and use, different requirements would be appropriate for diesel engines. One commenter to the proposal recommended that all diesel engines be approved as permissible.

For underground coal mines, MSHA believes that clean-burning engines are critically important. Unlike electrical equipment, diesel engines emit exhaust which contains toxic gases that can be harmful to miners. Inappropriately designed engines can pollute the mine atmosphere excessively, elevating toxic gases to levels that cannot be controlled with normal ventilation practices.

To achieve the objective of clean-burning, appropriately designed engines in mines, the final rule sets performance standards for all diesel engines, whether they are operated in the face area or outby.

The emission test requirements for Category A and B engines are the same, except that Category A engines are tested with methane injected into the intake system. Equipment operating at or near the point of coal extraction and in return air courses may encounter concentrations of methane gas, which is liberated during mining. Testing an engine with methane injected in its intake simulates operation of the engine in these areas of coal mines. Operation in methane atmospheres causes an increase in exhaust emissions, which requires higher ventilation rates.

Under the final rule, diesel equipment used in areas where permissible electrical equipment is required by existing standards incorporate fire and explosion prevention features provided by a power package. Such a power package must include a Category A engine and components added to the engine to prevent the ignition of methane and accumulations of combustibles. Power packages intended for use with Category A diesel engines must be approved under part 7, subpart F of the final rule.

Current safety standards require that intake air courses in areas away from or outby the mining face be maintained free of explosive concentrations of methane. Engines used on equipment operated in these outby areas must have a Category B approval under the final rule. Engines approved under Category B are emission tested without the injection of methane into the engine's intake system.

The proposed technical requirements for diesel engines addressed the control of gaseous exhaust emissions and quantification of the engines' particulate matter generation. The proposed rule also set specifications for the equipment used and the standard laboratory test conditions for determining gaseous and particulate output for diesel engines. The proposed requirements for measuring gaseous emissions were derived from now-removed part 32 and existing part 36, and the proposed requirements for measuring diesel particulate were based on the Environmental Protection Agency's requirements published in 40 CFR Part 86. In addition, the proposal specified the engine operating parameters as well as a method to calculate the ventilation rate and particulate index for the engine.

Engine manufacturers do not manufacture engines specifically for mining. Typically, ''off-road'', heavy-duty diesel engines are utilized in mining equipment. Over-the-road utility vehicles and smaller general industry equipment are also used in mines. At the time of the proposed rule, the only certification test specifications designed for engines used in mining were the MSHA engine certification standards in now-removed part 32 and in existing part 36.

In the proposal, MSHA used its rules in now-removed part 32 and existing part 36 for the steady-state test for gaseous diesel exhaust emission. The test equipment specified in the proposal for diesel exhaust particulate measurement was modeled after the transient test equipment required in 40 CFR Part 86, subpart N.

Commenters to the proposal stated that a correlation should not be made between MSHA's proposed rule and then-current EPA testing, because the proposal used a test with specific points in a ''steady state'', while EPA used a ''transient test.'' Commenters also recommended using the same test cycle for both gaseous and particulate matter. In addition, commenters generally recommended comparability of testing for similar types of tests and indicated a desire to use international standards whenever possible.

The International Organization for Standardization (ISO) has prepared ''ISO 8178 Reciprocating Internal Combustion Engines—Exhaust Emission Measurement'', which includes test specifications for off-road diesel engines. The ISO is a recognized international standard-setting body. Equipment manufacturers, as well as other standard-setting bodies, make reference to and adopt the standards developed by the ISO.

ISO 8178 is an international test standard for measuring off-road diesel engine emissions. It contains a detailed description of the test equipment requirements and standard procedures for conducting a steady-state test to determine both gaseous and particulate emissions. The ISO 8178 procedures also specify an 8-point test cycle for measuring both gaseous and particulate emissions. ISO 8178 does not set emission limits.

The final rule is based on the ISO 8178 ''Reciprocating Combustion Engines—Exhaust Emission Measurement'', part 1 test procedures that apply to gaseous and particulate emission testing for diesel engines. This change from the proposal is responsive to commenters' concerns about correlating the proposed rule and EPA diesel engine tests, and simplifies the test procedures. For example, under the final rule the gaseous emission tests are reduced to 8 test points from 39 test points under the proposal. The particulate emission tests are also reduced from 10 to 8 test points. In addition, the final rule permits the tests for exhaust gaseous and particulate emission tests to be performed concurrently following the same test cycle, rather than independently following different cycles. A number of minor changes are made in §§ 7.86, 7.87, 7.88, and 7.89 of the final rule, so that the tests performed under these sections conform to the ISO 8178 requirements. Substantive changes to these sections are discussed in this overview and in the section-by-section discussion that follows.

The final rule adds one requirement to the ISO 8178 test procedures. Section 7.89(a)(5)(iii) requires that 1.0 percent of methane be added to the intake air for testing Category A engines. This addition to the ISO 8178 procedure should present no technical difficulties for manufacturers or third-party laboratories. MSHA, however, will provide technical assistance for setting up this aspect of the test procedure upon request. The final rule also requires a test to determine the maximum fuel-to-air ratio, and specifies requirements for determining the gaseous ventilation rate and particulate index for diesel engines.

Basing the final rule on an international consensus standard enables diesel engine manufacturers to test with a single set of procedures common to both the United States and foreign markets. Also, existing test facilities established to perform tests to these international standards can be used to perform the tests prescribed by this final rule. In addition, use of the ISO 8178 test procedures leads to better comparability with international testing practices, and provides a more competitive posture for American products in foreign markets. Many off-road engine manufacturers are already complying with EPA and California Air Resources Board (CARB) requirements, which include testing in accordance with ISO 8178 procedures.

One commenter to the proposal objected to permitting engine manufacturers or third-party laboratories to test diesel engines for conformance to approval standards, questioning the objectivity of such an approach. MSHA experience over eight years with manufacturers and third-party laboratory testing under existing part 7 and the Agency's program for off-site testing (POST) of diesel engines confirms that non-MSHA testing is performed competently and produces reliable results. In addition, MSHA will initially witness all tests conducted by manufacturers and third parties to ensure continued reliability of test results. In all cases, MSHA will accept only results of tests performed by manufacturers or third-party laboratories which have the capability to competently perform the required tests with properly calibrated instrumentation.

Section 7.81 Purpose and effective date. The part 7, subpart E approval requirements are effective November 25, 1996. MSHA will begin accepting applications under subpart E immediately, but will complete any in-house part 32 applications, or evaluate such applications under the new part 7, subpart E, at the applicant's choice. As discussed elsewhere in this preamble, the requirements for the use of approved diesel engines in underground coal mines are effective in 3 years.

Commenters to the proposal generally supported the approval requirements of subpart E for diesel-powered equipment to be used in underground coal mines. Several commenters suggested, however, that a phase-in period, up to three years, be established. According to these commenters, manufacturers would use the phase-in period to gain experience with the new test procedures, become familiar with new engine approval application procedures, and re-evaluate their existing approvals.

The final rule does not incorporate a phase-in period for diesel engine approvals. Diesel engine manufacturers and third-party testing facilities are familiar with the ISO 8178 test procedures on which the final rule is based, and have the capability to perform these tests in their laboratories with minor changes. In fact, two engine manufacturers and a testing laboratory have tested diesel engines for MSHA approval using the ISO 8178 procedure.

With this diesel engine testing experience and capability already present in the marketplace, MSHA finds no reason to provide an extended phase-in period for the approval standards for diesel-powered equipment, and anticipates that manufacturers and third-party testing laboratories can immediately begin testing engines under subpart E.

Section 7.82 Definitions. In addition to the existing definitions in § 7.2, § 7.82 of the final rule sets out and clarifies the key terms which apply in subpart E. Commenters generally agreed with the proposed definitions, which were derived from definitions developed for ISO 8178 and the Society of Automotive Engineers (SAE) Recommended Practice J177.

No comments were received on the proposed definitions for ''Category A engines'', ''Category B engines'', ''corrosion-resistant material'', ''diesel engine'', ''exhaust emission'', ''percent load'', and ''steady-state condition''. These terms and their proposed definitions are adopted in the final rule.

The definitions of the terms ''rated speed'' and ''intermediate speed'' in the proposed rule have been modified in the final rule in response to a commenter who recommended that MSHA's definitions of these terms conform to definitions contained in internationally accepted standards. The definitions of these terms in the final rule are conformed to the definitions in ISO 8178.

The term ''peak torque speed'' in the proposed rule has been changed to ''maximum torque speed'' in the final rule to conform with ISO 8178. Both terms convey the same meaning.

One commenter objected to the definition of ''diesel particulate matter'' as ''any material, with the exception of water, which is collected on a filter passed by an air diluted exhaust stream.'' According to this commenter the proposed definition was vague and too dependent on the filter used and method of sampling. The final rule does not include the proposed definition, adopting instead the definition for diesel particulates contained in ISO 8178. The ISO definition is more specific, providing that diesel particulates are ''any material collected on a specified filter media after diluting diesel exhaust gases with clean filtered air at a temperature less than or equal to 325 K (52° C) as measured at a point immediately upstream of the primary filter. This is primarily carbon, condensed hydrocarbons, and sulphates

and associated water.'' In addition, the filter and sampling methods, which are well detailed in ISO 8178, are included in the final rule. The objective of this definition is to facilitate accurate, repeatable tests for the diesel particulate matter in an engine's exhaust. Other definitions may be more appropriate for addressing health effects.

The same commenter also objected to the proposed definition of ''total oxides of nitrogen'' as focusing only on nitric oxide and nitrogen dioxide. The commenter suggested revisions to these definitions and offered definitions for several other terms used in the proposed rule, including ''gaseous ventilation'', ''particulate index'', ''threshold limit value'', ''permissible exposure limit'' and ''recommended exposure limit.'' According to the commenter, these terms were not used consistently in the proposal. The final rule does not adopt these suggested changes. Many of these terms have accepted meanings that are well known. However, changes throughout the final rule have been made to be sure the terms are used consistently and appropriately.

The proposed definition of rated horsepower is revised in the final rule to conform with current procedures for evaluating engines under existing part 36. This change will help define an engine's power output as it is related to performance testing. A definition for the term ''operational range'' is added to also conform with current procedures for evaluating engines under existing part 36.

Section 7.83 Application requirements. The proposed application requirements were derived from now-removed part 32 and existing part 36 and are largely unchanged in the final rule. The application procedures are designed to provide sufficient information to demonstrate compliance with the technical requirements of subpart E, and form the basis for approval of diesel engines.

The final rule adopts the proposal to permit applicants to submit composite drawings in lieu of individual drawings. This approach reduces paperwork and affords applicants flexibility in the preparation of their drawings.

The final rule also provides for certain information to be submitted after approval testing. This information includes the ventilation rate and particulate index for the engine, and the fuel deration chart, which provides guidance for how to adjust approved engines to compensate for altitude.

Like existing part 7 and other MSHA approval standards, the documentation formulated in the application process forms the basis for MSHA's approval. Approved diesel engines must be manufactured in accordance with the specifications contained in the approval and, once put into service, approved engines must be maintained and operated within the parameters set in the MSHA approval.

In general, commenters concurred with the proposed application requirements. One commenter suggested that a description of the design features which promote efficiency and control over production of toxic emissions specifically include fuel injection timing. MSHA agrees that specifications for the fuel injection system of diesel engines and the fuel injection timing are key in controlling exhaust emissions. The proposal included a requirement that the fuel injection system be detailed in approval applications. However, a requirement specifying the fuel injection timing was not included in the proposed rule.

The final rule adopts the proposed requirement for a description of the fuel injection system, and adopts in paragraph (b)(6) the suggestion that fuel injection timing also be specified. This information had been required in now-removed part 32 and is required for part 36 engine approvals and to help ensure accurate measurement of the engine's emissions during the tests and proper maintenance of the engine's fuel injection timing.

Although the Agency allows electronic record storage in other areas of this regulation, electronic computer submission of part 7 approval applications is not yet available. MSHA's Approval and Certification Center is developing a means for computer submission, and at present has pilot programs to facilitate the use of electronic reporting. However, the system is in the formative stage and is not yet available for public use.

The paperwork hours in the approval application, including test requirements, are assigned OMB control number 1219–0100.

Section 7.84 Technical requirements. This section of the final rule sets the specific technical requirements for Category A and Category B diesel engines. The objective of this aspect of the final rule is to set standards which, when met, will produce clean-burning diesel engines that are safe and appropriate for use in the confined environment of underground coal mines.

Like the proposal, the final rule's requirements for the gaseous emissions of diesel engines are based on appropriate sections of existing part 36 approval regulations for diesel engines. Experience confirms that compliance with these regulations, which address fuel injection adjustments and fuel-to-air ratios, produces engines that operate without excessive gaseous emissions that can be harmful to miners.

One commenter to the proposal suggested that the fuel injection system on approved diesel engines be required to be fixed and sealed so that it could not be changed. According to the commenter, sealing the system would prevent unauthorized changes.

The final rule does not adopt this suggested change, as adjustments to diesel engine fuel injection systems are necessary for maintenance and to compensate for altitude. Adjustments such as these permit the fuel-to-air ratio for diesel engines to be maintained at a level which minimizes exhaust emissions.

The final rule does, however, adopt the proposed security requirements to prevent unauthorized fuel injection system adjustments. Fuel injection system adjustments are required to be changeable only after breaking a seal, or by altering the injection system's design. For example, a shim may be added or removed to change the fuel pump's performance. These parts are supplied by engine manufacturers and must be used in accordance with the engine's approval. For engines with electronic fuel injectors, specialized computer interface equipment is used to adjust the computer programming sequence. The programming sequence must be installed by the engine manufacturer and is listed with the engine approval documentation. After adjustments are made in a fuel injection system, any seal removed must be replaced. Failure to follow these procedures for adjusting a fuel injection system would result in the engine no longer being in approved condition. Under § 75.1914(a) of the final rule, diesel engines used in underground coal mines are required to be maintained in approved condition.

Consistent with a recommendation of the Diesel Advisory Committee, the technical requirements for diesel engines also include undiluted exhaust limits for carbon monoxide and oxides of nitrogen, both of which have toxic properties which can be harmful to miners. The limits set for these gases, which are determined when the engine is operated at its maximum fuel-to-air ratio, are derived from existing § 36.26(b) and now-removed § 32.4(f). As noted in the proposal, applying these exhaust gas limits to diesel engines for use in outby areas is new.

One commenter questioned why the proposal set the same undiluted exhaust gas limits for Category A and B engines, except that the carbon monoxide limit

was 0.30 percent for Category A engines, while the carbon monoxide limit for Category B engines was set at 0.25 percent. This aspect of the proposal, which is adopted without change in the final rule, recognizes a difference in the test procedure between Category A and B engines. As noted above, Category A engines must be designed to operate safely in face areas and return air courses where methane may be present. Thus, Category A engine testing is performed with 1.0 percent methane injected into the intake air. The methane acts as additional fuel in the engine, which affects the fuel-to-air ratio. This change in fuel-to-air ratio increases emission levels, especially carbon monoxide and oxides of nitrogen. Thus, the final rule technical requirements permit a slightly elevated carbon monoxide level for Category A engines during testing so as to avoid imposing an unnecessarily strict test requirement for this class of diesel engines. The ventilating air requirement, however, is based on the actual emissions measured during testing.

The final rule also defines procedures to establish the ventilating air quantities necessary to maintain the gaseous emissions of diesel engines within existing required ambient limits. Emissions from both Category A and Category B engines are diluted to the same ambient levels when their ventilating air requirements are calculated. Like the proposal and consistent with the recommendations of the Diesel Advisory Committee, the final rule addresses this issue by requiring that a ventilation rate be set for each engine model. Under the final rule, this ventilation rate must appear on the engine's approval plate. The ventilation rate, calculated under § 7.88 of the final rule, indicates the amount of air necessary to dilute carbon dioxide, carbon monoxide, nitric oxide, and nitrogen dioxide to within allowable levels. For consistency, the levels specified in the final rule are those set by existing § 75.322. These exposure standards are based on the 1972 threshold limit values set by the American Conference of Governmental Industrial Hygienists (ACGIH) and have applied to underground coal mines for nearly 25 years. This aspect of the final rule comports with the recommendation of the Diesel Advisory Committee that gaseous diesel exhaust components not be treated differently from contaminants generated by other mining sources. The final rule does not adopt updated exposure standards at this time because this issue remains in the rulemaking process for Air Quality standards.

The exposure levels adopted by the final rule for purposes of calculating the ventilation rate for an engine will lead to lower required air quantities for ventilating subpart E-approved engines, as compared to engines approved under now-superseded part 36. This is because engines previously approved under part 36 were required to dilute oxides of nitrogen and carbon dioxide to levels lower than currently specified by the threshold limit values (TLV®'s) in § 75.322. The ventilation rates set for engines under the final rule will be more precisely related to current exposure standards. In addition, § 75.325(g) of the final rule revises the percentage of the approval plate air quantity that is required when multiple units of diesel equipment operate in the same air current. Finally, as discussed elsewhere, the final rule is designed to produce an integrated system of controls to protect miners from overexposure to harmful diesel emissions.

Commenters generally accepted the value and purpose of setting a ventilation rate for each diesel engine model. Knowledge of the ventilation rate needed to control gaseous emissions to safe levels will allow comparison of the efficiency and ventilation demands of different engine models, and facilitate evaluation of their general ventilation needs during use. One commenter, however, urged that the gaseous ventilation rate for control of diesel engine exhaust gases not be part of the approval process. According to this commenter, existing ventilation and air quality standards are adequate.

The final rule adopts the requirements for determining the ventilation rate necessary to dilute diesel engine exhaust contaminants. Ventilation systems provide different quantities of air at different locations in the mine. Knowing the ventilating air quantities needed for diesel-powered equipment will allow the mine operator to make informed decisions about equipment selection and utilization and mine ventilation.

Other commenters, who acknowledged the purpose of establishing ventilation rates for approved diesel engines, recommended for the sake of clarity that the levels set for the gases be specified in the final rule. In the proposal, MSHA had set these levels by reference to the time weighted average (TWA) concentrations for the gases. The final rule adopts this suggestion and the levels for carbon dioxide, carbon monoxide, nitric oxide and nitrogen dioxide are specified in the final rule. The levels in the final rule are identical to the levels in existing § 75.322, and MSHA intends that the levels in the final rule conform with any levels that may ultimately be updated. Specifically, if any of the levels for any of these contaminants are revised as part of MSHA's Air Quality rulemaking, MSHA intends to conform the levels in this section to any revised levels.

The proposed requirement for fuel deration received no comments. The purpose of this requirement, which is adopted without change from the proposal, is to ensure that the fuel-to-air ratio does not increase due to the lower density of air at higher altitudes. Not correcting the maximum fuel delivery on the engine for higher altitude operation results in increased emission levels. The fuel injection rate established during the approval may be required to be reduced when the engine is used at a higher altitude.

Implementing a recommendation of the Diesel Advisory Committee, the proposed rule also called for a particulate index to be set for approved diesel engines. The particulate index specifies the quantity of air needed to dilute the particulate generated by the engine to 1 milligram of diesel particulate matter per cubic meter of air. The control of particulate matter in diesel engine exhaust was a significant issue for the Advisory Committee. The Committee concluded that whole diesel exhaust represents a probable risk for causing human lung cancer, and recommended that MSHA develop a regulatory scheme to monitor and control diesel particulate underground. The Committee did not recommend an exposure level, but did urge that consideration be given to what level of exposure to diesel particulate presents a health risk to miners. MSHA is currently developing regulations, separate from this rule, to address this issue.

The Diesel Advisory Committee also recommended that a particulate index be set for engines so that the mining industry and MSHA could compare the particulate levels generated by different engines in terms of a ventilating air quantity. For example, if the particulate indices for diesel engines of the same horsepower were established as 7,500 cubic feet of air per minute (cfm) and 12,000 cfm respectively, an equipment manufacturer, mine operator, and MSHA personnel could use this information, along with consideration of the type of machine the engines would power and the area of the mine in which it would be used, to make certain decisions. For example, a mine operator could use this information when choosing an engine to roughly estimate an engine's contribution of diesel particulate to the mine's total respirable

dust. MSHA would use this information when evaluating mine dust control plans. Equipment manufacturers can use the particulate index to design and install exhaust after-treatments.

The final rule retains the proposed requirement for a particulate index to be set for approved diesel engines. Unlike the ventilation rate set for each engine, the particulate index value will not appear on the engine's approval plate. The particulate index, calculated under § 7.89 of the final rule, indicates what air quantity is necessary to dilute the diesel particulate in the engine exhaust to 1 milligram of diesel particulate matter per cubic meter of air. This information will be available to the mining industry from the engine manufacturer and MSHA.

Some commenters to the proposal objected to the use of a particulate index to establish required ventilation air quantities for diesel engines. These commenters noted that a diesel particulate permissible exposure level has not yet been set and maintained that suitable monitoring technology is not available for widespread field use. These commenters also urged that control of diesel particulate in underground mines be accomplished through a combination of measures, including fuel requirements, equipment design, and controls such as ventilation and equipment maintenance. The commenters recommended that the particulate index not be part of the engine ventilation rate, and concluded that such an index should be viewed as a guideline providing useful information about diesel engines. The commenters further suggested that additional evaluation be undertaken to determine appropriate procedures for setting a particulate index.

The overall approach of the final rule is to control diesel emissions in the underground mine environment through various established methods, including those suggested by commenters. The information provided by the particulate index is part of the multi-level approach recommended by the Diesel Advisory Committee.

As explained above, the particulate index value determined for a diesel engine is intended to provide useful information about diesel engines, as the commenters suggested. In addition, the particulate index value does not appear on the equipment's approval plate and therefore is not considered in setting the engine's required ventilation rate.

Section 7.85 Critical characteristics. Critical characteristics, which are specified for all part 7-approved products, are those features or specifications which, because of their importance to proper operation of the equipment, must be inspected or tested on each unit manufactured. The proposal called for inspecting or testing each diesel engine to verify that the fuel rate is set to altitude, and the fuel injection pump adjustment is sealed, if applicable. No comments were received on this aspect of the proposal, and the final rule adopts the proposal without substantive change. Instead of requiring the fuel rate to be set to altitude, the final rule specifies that the fuel rate be properly set.

As discussed elsewhere in this preamble, the rate of fuel delivery to a diesel engine significantly affects its gaseous and particulate emission. As noted earlier, correct adjustment of the fuel injection pump is essential to the efficient operation of diesel engines.

Inspecting or testing the proposed critical characteristics for diesel engines approved under part 7, subpart E reasonably ensures that the performance and emission characteristics of production engines will be equivalent to those of the engine tested for approval. As a result, miners are protected against harmful exposure to diesel emissions.

No comments were received on this aspect of the proposal, which is adopted by the final rule, with the change noted above.

Section 7.86 Test equipment and specifications. This section adopts the measurement and evaluation methods for emissions from diesel engines as described in ISO 8178–1. The final rule describes the apparatus, or test cell, required for testing diesel engine performance, and sets the specifications for operating this testing equipment to perform steady-state tests for both gaseous and particulate emissions.

The major components of a test cell are a dynamometer with engine operating controls, and gaseous and particulate emission measurement systems. This test cell is used to perform the test required by §§ 7.87, 7.88, and 7.89 of the final rule. Most engine testing laboratories today have the equipment and meet the specifications called for by ISO 8178–1 and the final rule.

The final rule's test cell requirements are substantially the same as the proposed requirements, except that the specifications for the testing apparatus and test conditions are revised to conform with ISO 8178–1. Commenters to the proposal did not direct attention to these requirements, but did express concern about correlating the proposed rule test requirements and Environmental Protection Agency diesel engine tests, and recommended that the MSHA procedures conform to internationally accepted test procedures. The adoption of the ISO 8178–1 provisions eliminates this issue and is responsive to commenters' concerns.

Like the proposal, the final rule also sets specifications for the fuel to be used during testing of diesel engines. The proposed rule would have required No. 2D diesel fuel with certain properties. A uniform test fuel is important to obtaining repeatable test results and test data that can be compared. Commenters did not direct their attention to this aspect of the proposal, except that they generally encouraged adoption of international standards to the extent possible.

The final rule revises the proposed requirements for diesel engine test fuel to conform with the fuel requirements in § 75.1901. Section 75.1901 of the final rule specifies the use of diesel fuel containing no more than 0.05 percent sulfur. Under this section, diesel fuel used for engine testing must also be low in sulfur content. In addition, the properties specified for test fuel conform with the test fuel EPA requires for testing diesel engines that use low sulfur fuel. Thus, the final rule will not require testing laboratories to acquire special fuel to comply with the final rule.

The final rule also adopts the proposal that Category A engines, which are intended for operation in areas of mines where concentrations of methane gas could be encountered, be tested with 1.0 percent of methane added to the engine's intake air. As noted above, this addition to the ISO 8178 test procedure adopted by the final rule should present no technical difficulties for manufacturers or third-party laboratories. MSHA, however, will provide technical assistance for setting up this aspect of the test procedure upon request.

Metering in 1.0 percent of methane to the intake air of Category A engines replicates a foreseeable operating condition in underground mines. In addition, methane gas acts as a fuel when it is aspirated into a diesel engine, increasing its output of carbon monoxide and oxides of nitrogen. These emission effects need to be accounted for in determining the gaseous ventilation rate for Category A engines.

Section 7.87 Test to determine the maximum fuel-to-air ratio. As noted earlier, the tests prescribed by this section are performed using the test cell meeting the requirements of § 7.86. Determining the maximum fuel-to-air ratio for diesel engines is essential to controlling harmful diesel engine emissions. Too rich a fuel and air

mixture produces engine exhaust with elevated levels of carbon monoxide and oxides of nitrogen.

Under this section, engines are required to be operated at several speed/torque conditions to determine the concentrations of carbon monoxide and the oxides of nitrogen. Acceptable performance is achieved when the levels of these exhaust gases do not exceed the limits set by § 7.84(b) of the final rule throughout the operational range of the engine.

Commenters did not address the proposed test to determine the maximum fuel-to-air ratio for diesel engines. The final rule adopts the proposal without change.

Section 7.88 Test to determine the gaseous ventilation rate. The test to determine the gaseous ventilation rate for a diesel engine is required by the final rule to be performed using the test cell required by § 7.86. This test may be performed together with the test to determine the particulate index required by § 7.89.

The test required by this section measures the undiluted exhaust gas concentrations of carbon monoxide, carbon dioxide, nitric oxide, and nitrogen dioxide in the exhaust. These constituent gases of diesel engine exhaust are potentially harmful to miners in the confined environment of underground mines.

In accordance with § 7.86, exhaust gas measurements must be made at 8 specified points while the engine is operated at each rated speed and horsepower requested by the approval applicant. For Category A engines, 1.0 percent methane is added to the engine's intake, as discussed above.

Like the proposal, the final rule specifies the calculations to be performed using the results obtained from the test procedure. These calculations produce a gaseous ventilation rate for the diesel engine. As discussed above, the ventilation rate indicates the amount of ventilating air necessary to dilute carbon monoxide, carbon dioxide, nitric oxide and nitrogen dioxide to within permitted levels. The ventilation rate for each approved Category A or B diesel engine will appear on the engine's approval plate. Knowledge of the ventilation rate needed to control gaseous emissions to safe levels will allow comparison of the efficiency and ventilation demands of different engine models, and their general ventilation needs during use can be evaluated.

As discussed above, commenters generally accepted the value and purpose of setting a ventilation rate for each diesel engine model. One commenter urged that the ventilation rate not be part of the approval process, while others supported the approach taken in the proposed and final rules. These commenters, however, suggested that the levels for the exhaust gases be stated in the final rule. The final rule adopts this suggestion in § 7.84(c).

Section 7.89 Test to determine the particulate index. Like the other engine tests prescribed by the final rule, the test to determine the particulate index for an engine is required by the final rule to be performed using the test cell required by § 7.86. As noted above, this test may be performed concurrently with the test to determine an engine's gaseous ventilation rate required by § 7.88.

The test required by this section measures the amount of particulate in the engine's exhaust when it is operated at eight specified operating conditions. For Category A engines, 1.0 percent methane is added to the engine's intake, as discussed above.

The proposed rule would have required that the particulate index be determined using a different set of test points than those used to determine the gaseous ventilation rate. The particulate index tests were based on a cycle of 10 test points. In response to commenters' suggestions that the particulate and gaseous emissions tests be conducted using the same test cycle and internationally accepted test procedures, the final rule adopts the same ISO 8178–4, 8-point test cycle for both the particulate and gaseous emissions tests.

The Diesel Advisory Committee observed that whole diesel exhaust represents a probable risk for causing human lung cancer. While proposing no specific exposure level, the Diesel Advisory Committee recommended control of diesel particulate in engines used underground through a combination of measures, including equipment design.

Like the proposal, the final rule does not set a particulate limit for engines. Instead, the final rule specifies the calculations to be performed using the results obtained from the test procedures in this section. From the calculations, a particulate index is derived. As discussed above, the particulate index for an engine does not appear on its MSHA approval plate. This information will be available, however, from MSHA and the engine manufacturer.

Section 7.90 Approval markings. This section requires that each approved diesel engine be identified with a permanent approval plate containing certain information. Approval markings to identify equipment appropriate for use in mining have been used for more than 85 years, and are routinely relied upon by users of mining equipment as well as state and federal inspection authorities.

The information required to be displayed on diesel engine approval plates includes the MSHA-assigned approval number, together with the engine's model number, ventilation rate, rated power, high idle setting, and the altitude above which the engine must be derated. Including these specifications on diesel engine approval plates gives engine users convenient, immediate access to information important to proper maintenance and operation of diesel engines.

Commenters directed little attention to this aspect of the proposal, which is adopted without change in the final rule. Commenters who objected to setting a ventilation rate for diesel engines as part of the approval process repeated this concern with respect to the requirement for the ventilation rate to appear on engine approval plates. As discussed above, setting a gaseous ventilation rate for diesel engines comports with the recommendations of the Diesel Advisory Committee and provides diesel equipment users with information important to protecting miners. Knowledge of the rate of ventilation needed to control the gaseous exhaust emissions of a diesel engine facilitates comparison of the efficiency and ventilation demands of different engine models.

The other information required by the final rule to appear on an engine's approval plate likewise provides engine users needed data. The high idle setting informs maintenance personnel of the engine speed appropriate for conducting several of the tests to be performed as part of the engine's permissibility checklist. Together, an engine's approval number, model number, and its rated power and speed facilitate use of the manufacturer's maintenance procedures. The maintenance procedures, along with the altitude above which the engine must be derated, specify the adjustments which must be made to ensure that an engine continues to operate in approved condition.

Burden hours required to make and mount MSHA approval plates are assigned OMB control number 1219–0100.

Section 7.91 Post-approval product audit. This section incorporates the standard audit requirement for part 7-approved equipment, specifying that approval holders must make a diesel engine available for audit by MSHA, at no cost to the Agency. The obligation to

supply an engine for audit under this section arises only upon request by MSHA, and is limited to no more frequently than once a year, except for cause. Under existing § 7.8(b), the approval holder may observe any tests conducted under the audit.

Post-approval audits are a critical part of MSHA's quality control program for approved equipment. By inspecting and testing an engine for continuing compliance with its approval specifications, potential problems can be detected and confidence in the approval process is maintained. Since the inception of post-approval product audits under part 7, MSHA has detected numerous discrepancies, which have been effectively corrected.

Commenters directed no attention to this aspect of the proposal, which is adopted without change from the proposal.

Section 7.92 New technology. This section is designed to facilitate the introduction of new technology or new applications of existing technology. It allows MSHA to approve a diesel engine that incorporates technology for which the requirements of subpart E are not applicable, provided that MSHA determines the engine is as safe as one which meets the requirements of subpart E. To make this determination, MSHA develops appropriate technical requirements and test procedures when novel designs are submitted for approval. Experience with this provision under existing regulations has shown that new innovations can be effectively evaluated and made available for use in a prompt fashion, thus serving the best interests of miners' safety and health.

Commenters supported this aspect of the proposal, stressing that research and technological improvements in diesel engines can be expected. The final rule adopts the proposal without change.

Subpart F Overview

Subpart F of the final rule amends existing part 7, which specifies testing by the approval applicant or a third party. As an amendment to the existing regulations, the general administrative provisions of subpart A of part 7 apply to these new subpart F application requirements.

Subpart F establishes design and performance requirements for MSHA approval of ''diesel power packages'' for use in areas of underground coal mines where permissible electrical equipment is required by existing safety standards. A ''diesel power package'' is a diesel engine, together with the attached safety components, such as flame arresters, spark arresters, surface temperature controls, shut down systems, and the exhaust cooling system that make a diesel engine explosion-proof and reduce the engine's surface temperature to a safe level. Like the proposal, the final rule requirements for diesel power packages are largely derived from existing MSHA approval regulations in part 36, which apply to diesel engines for use in gassy underground mines. The final rule is also consistent with current MSHA practices for coal mines using diesel-powered equipment and with the recommendations of the Diesel Advisory Committee. The Advisory Committee specifically recommended an approval program for diesel power packages.

Commenters generally accepted the proposal for MSHA approval of diesel power packages, recognizing the need for diesel-powered equipment used in underground coal mines to meet critical specifications and to be properly tested for safe operation in a potentially explosive atmosphere. Some commenters directed their attention to the effective date of subpart F, expressing concern about the availability of commercial testing facilities. For the reasons discussed below, the final rule does not adopt an extended phase-in period. However, accommodations are made in the final rule to simplify the implementation of testing in the private sector, and MSHA will continue to perform diesel power package testing to subpart F specifications for up to 3 years, pending the development of private sector resources.

Other commenters recommended that diesel engine exhaust after-treatment devices, such as particulate filters or catalytic converters, be required as part of diesel power packages. These commenters also suggested that the ventilation rate and particulate index set under §§ 7.88 and 7.89 of the final rule credit the use of such devices.

The final rule responds to these comments in part. Under the MSHA approval program in subpart E, MSHA will evaluate exhaust gas and particulate controls, provided these devices are integral to the engine design and are part of normal production engines. The effectiveness of such controls will also be considered in setting the engine's ventilation rate and particulate index. This approach will ensure that the controls are compatible with the engine and are effective. MSHA has already approved, under existing regulations, engines which incorporate techniques such as electronic fuel injection systems. Exhaust after-treatment devices that are not part of an engine's design and production have been developed which can reduce the particulate matter in diesel engine exhaust. Also, catalytic converters are available which can be added to engines to reduce the levels of some harmful gaseous emissions. MSHA encourages the use of these devices, and under existing regulations has approved, as safe, several power packages that utilize catalytic converters and particulate filters. However, under the final rule MSHA will not evaluate the effectiveness of these exhaust after-treatment devices. Exhaust after-treatment devices encompass a wide range of concepts that have demonstrated varying degrees of effectiveness and reliability. The evaluation of these types of after-treatment devices is beyond the scope of a part 7 approval program.

For the same reasons, the final rule does not adopt a commenter's suggestion that the particulate index for an engine be adjusted to reflect the use of a diesel particulate filter. Also, the particulate index for an engine is intended to be used by manufacturers and mine operators as an aid for, among other things, selecting appropriate after-treatment devices such as particulate filters. Therefore, under the final rule the particulate index for an engine will indicate the particulate contained in the raw engine exhaust.

Other aspects of the final rule will, however, recognize exhaust after-treatment controls. The positive effects of catalytic converters in lowering levels of harmful exhaust gases may be considered under § 75.325(i) for reducing the quantity of ventilating air required where multiple pieces of diesel-powered equipment are in use. Also, particulate filters can be effective in maintaining compliance with the respirable dust standard set by existing § 70.100.

During the course of this rulemaking, the question has been raised as to whether the final rule should require that some or all diesel engines be equipped with particulate filters. As noted above, MSHA encourages the use of such filters and other emission controls. However, the proposed rule did not raise this issue and MSHA received only limited comment regarding the appropriate role of diesel particulate filters. The final rule, therefore, does not require the use of these filters. However, MSHA is currently developing a proposed rule to address control of miners' exposure to diesel particulate. This rulemaking will afford an opportunity to fully develop this issue.

Other commenters suggested that diesel engine cooling system

components, such as radiators, not be included as part of the approval of diesel power packages so as to permit changes in cooling system components to be made in the field without affecting the engine's approval. The final rule does not adopt this suggestion. The inter-relationship of the components in the cooling system of a diesel engine is critically important to controlling power package surface temperatures, which, when elevated, can lead to a fire. Consequently, the engine cooling system components must be considered an integral part of a diesel power package. This aspect of the final rule does not prohibit field radiator changes, provided that the inter-relationship of the engine's cooling system components is maintained in approved condition.

A number of minor changes are made in §§ 7.97, 7.98, 7.100, 7.101, 7.102, and 7.103 of the final rule to clarify the requirements of these sections. Substantive changes to these sections are discussed in the section-by-section discussion which follows.

Section 7.95 Purpose and effective date. The final rule's part 7, subpart F approval requirements apply to diesel power packages intended for equipment used in areas of underground coal mines where this equipment is required to be permissible. The design, performance and testing requirements of this section are effective November 25, 1996. MSHA will begin accepting applications under new subpart F immediately. To accommodate all interests, the Agency also will complete any in-house part 36 safety component certification applications, or evaluate such applications under new subpart F, at the applicant's choice. As noted elsewhere in this preamble, the requirements for approved diesel power packages in equipment used in underground coal mines become effective in 3 years.

As noted above, several commenters urged that an extended phase-in period of several years be included in the final rule. According to the commenters, a phase-in period is needed to allow for the development of competent third-party testing facilities, particularly with respect to explosion-proof testing. Other commenters suggested that subpart F be made effective immediately, so as to accelerate conformance to the new requirements for the benefit of miners' safety.

A number of the final rule's test requirements can be performed effectively with inexpensive, simple test equipment or facilities, or with the power package installed in the mining equipment. For example, the static pressure test required by § 7.104 to evaluate the structural integrity of power package components can be performed using currently available hand pump devices. Likewise, explosion-proof testing can be performed in inexpensive test chambers of relatively simple design.

Nonetheless, MSHA recognizes that some testing capabilities are not immediately available in the private sector, such as surface temperature testing and exhaust gas cooling efficiency testing with methane gas injection in the intake air. To facilitate the approval of power packages and accommodate the needs of applicants, MSHA may be consulted for simple alternative procedures which can be used to provide the same results. In addition, MSHA will perform the tests required by subpart F for diesel power package approval at its Approval and Certification Center upon request by applicants. MSHA anticipates providing these test services, for the fees set in accordance with 30 CFR Part 5, for up to 3 years, or until private sector testing capability is available. MSHA reserves the right to determine when competent private sector testing capability is available and to discontinue MSHA testing.

Section 7.96 Definitions. In addition to the existing definitions in §§ 7.2 and 7.82, this section of the final rule sets out and clarifies the key terms used in subpart F.

Commenters did not direct specific attention to this aspect of the proposal. The final rule adopts the proposed definitions, with five exceptions, adds two terms and definitions, and deletes three definitions from the proposal which now appear in subpart E. These changes are intended to add flexibility to the final rule and respond to confusion among some commenters with respect to the substantive requirements of subpart F.

The definition for ''exhaust conditioner'' has been revised to remove the words ''corrosion-resistant.'' The requirement for the exhaust conditioner to be made of corrosion-resistant material is adopted from the proposal in § 7.98(s)(4)(i). The definitions for ''exhaust system'' and ''intake system'' are revised to include the phrase ''but is not limited to'', to recognize the use of components not otherwise mentioned in the definitions for these terms. The term ''explosive mixture'' has been changed to ''flammable mixture'' to conform with part 36, and the definition for this term has been modified with the non-substantive change of removing the word ''violently.'' The definition for ''fastening'' has been modified for the sake of clarity to remove the words ''device such as'' when referring to bolts, screws, or studs. The term ''high idle speed/no load'' has been revised to ''high idle speed.'' This is another non-substantive change, since ''no load'' is specified in the definition of the term. New definitions for ''dry exhaust conditioner'' and ''wet exhaust conditioner'' are added to the final rule to more clearly differentiate between the requirements for these systems. Under the final rule, a dry exhaust conditioner is defined as a device which cools exhaust gases without direct contact with water, such as a heat exchanger. A wet exhaust conditioner is defined as a system which cools exhaust gases through direct contact with water. Minor changes to the definitions for ''step (rabbet) joint'' and ''threaded joint'' have been made for the sake of clarity. The terms ''corrosion-resistant material,'' ''idle speed/no load,'' and ''rated speed'' and their definitions are deleted from subpart F. These terms are common to both subparts E and F, and have already been defined in subpart E. Section 7.96 has been modified to incorporate the definitions of subpart E, § 7.82.

Section 7.97 Application requirements. This section is derived from existing part 36 and requires that an application for approval of a diesel power package contain sufficient information to document compliance with the technical requirements of the final rule. The list of information specified for inclusion in the approval application, which is revised from the proposal in response to commenters and to fully identify the engine and the fan blade material, is intended to help applicants supply the data necessary for a prompt evaluation. The final rule permits applicants to submit composite drawings. This approach reduces paperwork, affords applicants flexibility in the preparations of their drawings, and has proven to be effective in other MSHA approval programs.

Like existing part 7 and other MSHA approval standards, the documentation formulated in the application process under § 7.97 forms the basis for MSHA's approval of a diesel power package. Approved diesel power packages must be manufactured in accordance with the specifications contained in the approval and, once put into service, approved power packages must be maintained and operated within the parameters set in the MSHA approval.

The paperwork hours in the approval application, including test requirements, are assigned OMB control number 1219–0100.

Section 7.98 Technical requirements. This section of the final rule sets specific technical requirements

for diesel power packages. Diesel power packages are intended for use with Category A engines so that they can be operated safely and not create a fire or explosion hazard. Consistent with the Advisory Committee's recommendation that permissible diesel equipment be required in areas of underground coal mines where permissible electric equipment is required, the final rule's technical specifications introduce many of the safety features currently required for permissible electric-powered equipment.

Like the proposal, the final rule is derived largely from existing technical requirements in part 36 for diesel-powered equipment intended for use in gassy non-coal mines. The final rule also addresses the hazard of combustible coal dust by specifying a maximum surface temperature of 302 °F (150 °C). This is the same technical requirement applied to permissible electric-powered equipment. Other aspects of the final rule set specifications necessary to control engine surface temperatures, sparking, and the passage of flame from the exhaust system or components to the external atmosphere. Any of these conditions could ignite an explosion or fire in the underground coal mine environment.

Commenters generally accepted the proposed technical requirements, which, as noted above, are based on long-standing regulations which have been proven effective and workable. Commenters did, however, raise several issues.

Some commenters sought wider tolerances for explosion-proof enclosures in diesel power packages, citing experience in the United States and Europe. These commenters directed their attention to the proposed specifications for joints in engine exhaust systems, and suggested that MSHA review the proposed specification of 0.004 inches for maximum clearance for joints all in one plane.

The final rule retains this specification, which has proven to be effective for decades. Commenters offered no basis for the recommendation for a wider tolerance.

Other commenters suggested that electric starting devices for diesel engines be prohibited. The proposed rule recognized the conventional use of hydraulic, pneumatic or other mechanically actuated starting mechanisms, but also retained the flexibility to evaluate other means of starting under § 7.107 of the rule concerning new technology. This aspect of the proposal differs from the existing part 36 regulations from which this proposal was derived.

The final rule is intended to serve as a flexible set of regulations that will continue to be workable over a period of years. Throughout the final rule MSHA has adopted the more current practices and, where appropriate, provides that alternatives may be developed which are safe and effective. With this in mind, the final rule does not expressly prohibit the use of electric starting devices for diesel engines, adopting the proposal to permit MSHA to evaluate other starting mechanisms. Such alternatives are subject to evaluation under § 7.107 and must be found by MSHA to be as safe as the pneumatic and hydraulic starting mechanisms presently in use.

Some commenters asked for clarification of proposed paragraph (i) with respect to the safety shutdown system required for diesel power packages. The safety shutdown system is required to automatically shut off the fuel supply and stop the engine in response to certain dangerous engine conditions. MSHA intended in the proposal, and the final rule clarifies, that the shutdown system must respond to both high exhaust temperature and low water level in the engine's exhaust conditioner. Either of these conditions can rapidly lead to a fire or explosion hazard.

In addition, the final rule has been revised from the proposal to cover other safety system shutdowns that may be installed by the applicant. Section 75.342 requires methane monitors on some permissible equipment, and the final rule requires permissible equipment to be provided with a fire suppression system meeting the requirements of § 75.1911. Both of these standards specify that the diesel engine must shut down when either an elevated level of methane is encountered or when the fire suppression system is actuated. This requirement will most likely be satisfied by a connection to the safety shutdown system. The technical requirements of this rule now cover these additional sensors.

Another commenter suggested that the safety shutdown system include automatic brake lock-up to prevent diesel-powered equipment from rolling. This aspect of a machine's safety is evaluated under the existing requirements of part 36 and is not part of a diesel power-package approval. Thus, the final rule does not adopt this suggestion.

The final rule adopts clarifying revisions in addition to changes made in response to commenters. In several instances more precise language is adopted to differentiate between requirements for wet and dry exhaust conditioner systems. Proposed § 7.98(d) has been revised in the final rule to refer to ''nonmetallic rotating parts'' instead of ''fans'', to conform with other MSHA regulations. Paragraph (p)(2)(ix) has been revised to require that the minimum thread engagement of fastenings must meet the requirements of the explosion tests in § 7.104. This is a correction. This change conforms to paragraph (p)(2)(viii), which requires both tests for acceptance of a minimum thread engagement of fastenings less than ⅜ inch. In addition, paragraph (q)(7) of the final rule does not retain the proposed requirement that a ''minimum of four fastenings'' be used for explosion-proof joints. MSHA's experience shows that flange designs with fewer than four fastenings have proven to be effective. Paragraph (r)(5) has been revised to note that the opening for connection of a gage to measure the intake vacuum must be closed by a plug or other suitable device that is sealed or locked in place except when in use. This language conforms to the language of part 36, and closing of this opening is necessary to perform certain tests in this subpart. Paragraph (s)(1) has been revised to require that the flame arrester prevent the discharge of glowing particles, conforming it to the requirement in part 36. Finally, paragraph (s)(5) has been revised to note that the opening for connection of a gage to measure the backpressure must be closed by a plug or other suitable device that is sealed or locked in place except when in use. This language also conforms to part 36, and is needed to perform some of the tests under this subpart.

Section 7.99 Critical characteristics. Critical characteristics, which are specified for all part 7-approved products, are those features or specifications which, because of their importance to proper operation of the equipment, must be inspected or tested on each unit manufactured. The proposal focused on power package features essential to preventing fires and explosions in the underground coal mine environment, such as flame-arresting path clearances and the explosion-proof integrity of the power package. Commenters did not direct their attention to this aspect of the proposal, which is adopted without change in the final rule.

Section 7.100 Explosion tests. This section describes the tests to be performed on diesel power packages to ascertain whether they are explosion-proof, as specified by the technical

requirements in § 7.98. Like the proposal, the final rule is derived from existing § 36.46. Using an explosive mixture of natural gas and air, or methane and air, the tests prescribed by the final rule determine the power package's integrity in the event of an explosion inside the intake or exhaust system. This could be caused by an engine backfire during starting or ingestion of methane into the engine while it is running. The prescribed tests determine whether flame arresters and joints are capable of preventing propagation of the internal explosion to the surrounding atmosphere. These tests also determine the lowest water level in the exhaust conditioner that will act effectively as a flame arrester, and the peak explosion pressures generated in each segment of the intake and exhaust system. Excessive pressures may be an indication of a design flaw.

Commenters did not raise issues regarding the proposed explosion tests. However, the final rule includes one change from the proposal to better ensure the ability of a diesel power package to withstand an internal explosion, and another change to revise the speeds at which dynamic tests are to be conducted. The final rule also includes non-substantive changes for clarification and to conform the final rule with existing MSHA regulations.

Paragraphs (a)(2) (v) and (vi) of the final rule specify an internal peak pressure of 110 psig instead of the proposed 125 psig, during power package explosion-proof testing. Excessive internal pressures during explosion-proof testing indicate the potential for failure of the diesel power package in use, with potentially catastrophic results in the underground coal mine environment. Lowering the peak pressure expected during explosion-proof testing recognizes that diesel power package designs differ and that it is difficult to select the optimum location for pressure measurements. When pressures greater than 110 psig are measured during testing, the final rule specifies redesign of the system to reduce the pressure or more rigorous testing to verify the integrity of the system. Due to the critical nature of this test, MSHA has adopted the same approach in its explosion-proof test requirements for electric motors. The final rule conforms these like requirements.

Paragraph (a)(2)(vii) of the final rule requires that dynamic tests be conducted at two speeds—1800±200 RPM and 1000±200 RPM—instead of at rated speed and 50 percent of rated speed specified in the proposal. The speeds set by the final rule correspond to the speeds at which dynamic tests are performed successfully at MSHA facilities. Also some test facilities may not be capable of performing tests at the rated speed called for by the proposal. This change is also reflected in paragraphs (a)(3)(iii) (A) and (B).

For clarification, the final rule also adopts more precise language to identify requirements which apply to wet exhaust conditioners, distinguishing them from dry systems. The final rule also defines natural gas that may be used in explosion-proof testing in a manner that better recognizes the variables in the make-up of the hydrocarbons found in natural gas. As a result, the final rule affords greater flexibility for manufacturers and testing laboratories.

Section 7.101 Surface temperature tests. This section describes the tests necessary to ascertain that diesel power packages will not create a fire hazard in underground coal mines due to coal dust or other combustible materials contacting hot surfaces. Like the proposal, the final rule is derived from § 36.48, and sets a maximum external surface temperature of 302 °F (150 °C). The test protocol simulates the operation of a diesel power package under heavy use conditions. A note has been added to this section to alert the applicant that this test may be done simultaneously with the exhaust gas cooling efficiency test described in § 7.102 of the final rule.

Commenters did not direct their attention to this aspect of the proposal. The final rule is unchanged from the proposal, except for a non-substantive clarifying change regarding wet exhaust conditioners and the elimination of the reference to the use of natural gas. A reference to natural gas, which consists primarily of methane, is redundant. Instead, the final rule specifies the percentage of methane to be added to the intake. Elimination of the reference to natural gas also conforms this section to similar tests, which also determine engine performance and which only specify methane, in subpart E of part 7.

Section 7.102 Exhaust gas cooling efficiency test. This section describes the test procedures for measuring the temperature of the exhaust gas at the discharge point from the exhaust conditioner. Acceptable performance under this test is exhaust gases that do not exceed 170 °F (76 °C) for power packages with a wet exhaust conditioner, and 302 °F (150 °C) for a dry system. The proposed and final rules are derived from existing § 36.47 and address the hazard of hot exhaust gases creating a fire or explosion hazard.

Commenters raised only one issue concerning this aspect of the proposal, suggesting clarification of the different performance requirements for wet and dry exhaust conditioners. The final rule adopts this suggestion.

Section 7.103 Safety system controls test. This section is derived from § 36.47 and describes tests to evaluate the performance of the safety shutdown systems required for diesel power packages. As discussed above, these systems automatically shut down a diesel engine in response to potentially dangerous conditions, such as overheating. The tests prescribed introduce failure modes, such as loss of engine coolant, and initiate the safety system. Acceptable performance is achieved when the safety system automatically shuts down the engine before the technical requirements for approval are exceeded.

Commenters recommended that the final rule more clearly delineate the different requirements for wet and dry exhaust conditioners. The final rule adopts this suggestion in paragraphs (a)(3), (a)(4), (b)(2), and (b)(3).

Commenters also suggested that paragraph (a)(7)(ii) be amended to include a caveat about the surface temperature of a turbocharger not exceeding 302° F (150° C). This comment is not adopted because the final rule addresses surface temperature control under § 7.101 and requires that all external surfaces of power packages, including turbochargers, not exceed 302 °F (150° C). Paragraph (b)(7) has been revised to accept starting mechanisms constructed of nonsparking materials in addition to starting mechanisms that prevent the engagement of the starter while the engine is running. This revision conforms to § 7.98(j)(1), which permits both options under the final rule, as it would have under the proposal.

Section 7.104 Internal static pressure test. This section describes tests to determine if the design of the intake and exhaust system components of diesel power packages is structurally sound. The prescribed tests specify internally pressurizing each segment of the intake and exhaust system. The pressure required to be applied is four times the maximum pressure observed in the tests performed under § 7.100, or 150 psig (±5 psig), whichever is less. Acceptable performance is based on an assessment of key points in the intake and exhaust system, such as joints and welds, for evidence of leakage or damage.

Commenters raised no issues with respect to the proposal. Paragraph (b)(2)(vi) has been added to limit

permanent distortion of any planar surface of the diesel power package to 0.04-inches/linear foot or less. This change conforms this requirement to the same requirement applied to the explosion tests in § 7.100(b)(7).

Section 7.105 Approval markings. This section requires that each approved diesel power package be identified with a permanent approval plate inscribed with the MSHA approval number. If the power package includes a wet exhaust conditioner that functions as an exhaust flame arrester, the final rule requires that the approval plate also indicate the grade limitation for the power package. This information is important so that users are aware of the maximum grade on which the exhaust conditioner will be effective as a flame arrester.

As noted elsewhere in this preamble, approval markings have been used for more than 85 years, and are routinely relied upon by users of mining equipment as well as state and federal authorities to identify equipment appropriate for use in mining.

Another commenter suggested clarification of the proposal with respect to the grade limitation for certain diesel power packages. The final rule has been revised in response to this commenter to clarify that the grade limitation applies to systems which use a wet exhaust conditioner as a flame arrester. No grade limitation is appropriate for power packages with a dry exhaust conditioner.

Burden hours required to make and mount MSHA approval plates are assigned OMB control number 1219–0100.

Section 7.106 Post-approval product audit. This section incorporates the standard audit requirement for part 7-approved equipment, specifying that approval holders must make a diesel power package available for audit by MSHA, at no cost to the Agency. The obligation to supply a power package under this section arises only upon request by MSHA, and is limited to no more frequently than one a year, except for cause. Under existing § 7.8(b), the approval holder may observe any tests conducted under the audit.

Post-approval audits are a critical part of MSHA's quality control program for approved equipment. By inspecting and testing a diesel power package for continuing compliance with the specifications for its approval potential problems can be detected and confidence in the approval process is maintained. Since the inception of post-approval product audits under part 7, MSHA has detected numerous discrepancies which have been effectively corrected.

Commenters directed no attention to this aspect of the proposal, which is adopted without change from the proposal.

Section 7.107 New technology. This section is designed to facilitate the introduction of new technology or new applications of existing technology. It allows MSHA to approve a diesel power package that incorporates technology for which the requirements of subpart F are not applicable, provided that MSHA determines the power package is as safe as one which meets the requirements of subpart F. To make this determination, MSHA develops appropriate technical requirements and test procedures when applications for the approval of novel designs are submitted. To provide confidence in the adequacy of the design, such tests may be required to be performed by MSHA. Experience with this provision under existing regulations has shown that technological innovations can be effectively evaluated and made available for use in a prompt fashion, thus serving the best interests of miners' safety and health. Commenters generally supported this aspect of the proposal, and the final rule adopts the proposal without change.

Section 7.108 Power package checklist. This section requires that approved diesel power packages be accompanied by a description of the features which must be checked and tests that must be performed to ascertain that the power package is in approved condition. These instructions, which are developed as part of the approval process, are intended to aid power package users in keeping this equipment in safe operating condition.

Commenters did not direct specific attention to this aspect of the proposal, which is adopted without change in the final rule.

Part 7, Subparts G, H and I

The final rule does not adopt proposed subpart G to part 7, nor further develops the advance notice of rulemaking published concurrently with the proposal concerning subparts H and I to part 7. Subpart G-approved power packages would have been required for nonpermissible, heavy-duty diesel-powered equipment used in underground coal mines. Subpart H would have established regulations for the approval of fully assembled permissible diesel-powered machines, and subpart I would have set requirements for the approval of fully assembled nonpermissible, heavy-duty diesel-powered equipment. In lieu of this approach, the final rule responds to the commenters who urged that safety and fire protection features for nonpermissible diesel-powered equipment be addressed in the Agency's part 75 safety standards for underground coal mines. Existing part 36 is retained by the final rule and revised to specifically apply to permissible diesel-powered equipment for use in underground coal mines. Subpart H is not further developed by the final rule.

In the proposal, subparts G and I were developed as an approach to several of the Advisory Committee's concerns. In its deliberations, the Advisory Committee considered the risk of fire on nonpermissible diesel-powered equipment caused by hot surfaces igniting combustibles such as hydraulic and lubricating oils, diesel fuel, and coal dust. To address this hazard, the Committee recommended limiting engine surface temperatures. Under the proposal, surface temperature controls and other machine safety features for heavy-duty nonpermissible diesel equipment would have been addressed in subparts G and I.

The Committee, however, also recognized the difficulty of applying such controls to all nonpermissible diesel-powered equipment, especially light-duty, utility equipment. The Advisory Committee, therefore, recommended that a ''limited class'' of light-duty equipment be identified for which less complex fire prevention measures would be required, such as fire suppression systems which shut down the engine, guarded drive shafts to prevent damage of fuel and hydraulic lines in the event of a shaft failure, protection of the fuel tank and lines, and proper design of the electrical system to prevent electrical arcs. The proposal included these requirements for a ''limited class'' of light-duty equipment in the part 75 safety standards for underground coal mines.

The Advisory Committee also examined what additional features should be included in the approval requirements for completely assembled units of diesel-powered equipment. The Committee recommended that MSHA develop an approval program that would emphasize other equipment safety features which could be readily addressed by equipment manufacturers. These features included safeguarding of the fuel system, an exhaust gas dilution system, a fire suppression system, and appropriate electrical and braking systems. As a completely assembled machine, the interrelationship of these systems would be evaluated as part of the approval process contemplated in the proposal under subpart H.

A number of commenters objected to the approval of nonpermissible diesel-

powered equipment. These commenters maintained that such an expansion of MSHA's approval process would result in regulating diesel-powered equipment differently than electric-powered equipment without justification, and would present severe technical and economic difficulties in meeting certain proposed requirements. The commenters recommended that the final rule adhere to the long-standing regulatory approach for electric-powered equipment, which sets performance-oriented safety requirements for nonpermissible equipment in the Agency's part 75 safety standards for underground coal mines. According to the commenters, this approach would be responsive to the hazards posed by diesel-powered equipment, and provide sufficient flexibility to facilitate the introduction of new and safer technology.

In contrast, one commenter urged that all diesel-powered equipment be approved as permissible, without regard to the equipment's use in the mine. This commenter pointed out that diesel-powered equipment presents different hazards than electric equipment, inasmuch as it contains both a fuel source and an ignition source. The commenter further maintained that permissible diesel-powered equipment receives better maintenance than nonpermissible equipment, and explosive accumulations of methane can be encountered anywhere in an underground coal mine. This commenter noted that since 1969, 10 explosions occurred in areas where nonpermissible equipment is permitted, and seven of these explosions were caused by equipment that was not maintained in permissible condition.

Another commenter agreed that heavy-duty nonpermissible equipment should have approved engines and power packages to limit harmful emissions from the engine and protect against the fire hazard presented by hot engine surfaces. This commenter, however, objected to MSHA approval of fully assembled nonpermissible machines as contemplated by subpart I.

MSHA acknowledges that fire prevention and other machine safety features can be successfully introduced for nonpermissible equipment, without a formal approval program. This regulatory approach has been effectively implemented through MSHA's part 75 safety standards for underground coal mines as they apply to nonpermissible electric-powered equipment. For example § 75.518 provides fire protection by requiring electrical system overload protection for nonpermissible electric-powered machines. Section 75.523–3 provides a machine safety feature by requiring automatic emergency parking brakes. Setting such performance-based requirements for nonpermissible equipment maximizes the flexibility afforded mine operators and manufacturers to minimize the hazards of this equipment, and facilitates the introduction of new technology for dealing with these hazards. For example, new heat insulating materials have been developed since the publication of the proposed rule, which can be used to control surface temperatures on diesel-powered equipment.

To adapt this regulatory approach to nonpermissible diesel-powered equipment, the final rule extends the proposal's safety requirements for limited class equipment. Under the final rule, nonpermissible diesel-powered equipment is not required to be approved by MSHA. Instead, this equipment must comply with the final rule's safety requirements in §§ 75.1909 and 75.1910. These standards include requirements for fire prevention and machine safety features such as protection of hydraulic, fuel and electrical systems and adequate brakes and operator controls.

Part 36

Existing part 36, previously known as schedule 31, has been in effect since 1961. It sets approval requirements and specifications for diesel-powered equipment used in ''gassy noncoal mines and tunnels''. The final rule retains these existing regulations as the basis for approval of diesel-powered equipment and, in lieu of further developing subpart H, includes amendments which expand part 36 to apply to equipment used in underground coal mines. Specifically, part 36 is amended to afford manufacturers the option of incorporating into their equipment part 7-approved power packages. Diesel-powered equipment with approved power packages will be suitable for use in areas of underground coal mines where permissible equipment is required. The existing part 36 approval requirements for diesel-powered equipment used in metal and nonmetal mines are unchanged by the final rule. Part 36-approved equipment with certified engines and safety component systems will continue to be recognized for use in metal and nonmetal mines where permissible equipment is required. MSHA will issue approval numbers that differentiate between equipment for use in coal mines and equipment for use in metal and nonmetal mines. Machines approved under revised part 36 specifically for use in underground coal mines will be identified with an MSHA approval number in a new sequence ''36c–''. This will indicate that the equipment has been approved for use in underground coal mines. A part 36 MSHA approval number in the sequence ''31–'' will indicate that the equipment has been approved for use in metal and nonmetal mines.

These changes are responsive to a number of commenters who urged that the existing part 36 regulations for the approval of diesel-powered equipment be retained and continue to apply to equipment for use in metal and nonmetal mines. In addition, the final rule expands the scope of part 36, eliminating the need for separate approval regulations for diesel-powered equipment for use in underground coal mines as contemplated by subpart H in the proposal.

To retain part 36 and include the approval of diesel-powered equipment for use in underground coal mines, the final rule re-titles part 36 and eliminates references to ''gassy noncoal mines and tunnels'' and related definitions. In addition, the application requirements of § 36.6 and design requirements of § 36.20 are revised to recognize the use of part 7-approved power packages, which substitute for §§ 36.21 through 36.26 (except §§ 36.25(f) and 36.43 through 36.48).

The final rule also updates part 36 in several respects. Section 36.20, concerning the quality of material, workmanship and design, is revised to eliminate an outdated reference to § 18.24 of part 18, schedule 2F. In its place, the final rule requires compliance with § 7.98 of the final rule, which provides structural and flame path requirements for explosion-proof enclosures. This aspect of the final rule reflects long-standing requirements for explosion-proof components.

The definition of ''low-volatile hydrocarbon (diesel) fuel'' in § 36.2(i) is deleted by the final rule. This definition is outdated and potentially confusing in context with § 75.1901 of the final rule, which specifies requirements for diesel fuel.

C. 30 CFR Part 70 Discussion

Section 70.1900 Exhaust Gas Monitoring

As outlined in the proposal, the Advisory Committee regarded the health effects of diesel exhaust as a key area of concern. In its final report, the Advisory Committee focused on two areas—exposure limits and a sampling strategy to monitor the concentration of diesel exhaust in miners' work environment.

The Committee recommended further research to develop information about diesel particulate exposure levels at which health effects accrue. The Committee also addressed gaseous diesel exhaust components, concluding that suitable protection for miners would be achieved by relying on coal mine air quality standards, either as they currently exist or may be revised in the future. The Advisory Committee further concluded that exposure limits for gaseous contaminants of diesel exhaust should not be unique from the exposure limits set by the same contaminants generated by other mining sources, such as blasting. The Committee specifically recommended a periodic sampling strategy for carbon monoxide, nitric oxide and nitrogen dioxide and sampling for sulfur dioxide if diesel fuel containing more than 0.25 percent sulfur is used. In addition, the Advisory Committee recommended a sampling strategy which utilized return air course samples to trigger personal exposure sampling. The Advisory Committee's recommendations served as the basis for the proposed rule.

The proposed rule did not contain a diesel particulate exposure standard. At the conclusion of their deliberations the Advisory Committee recommended that the Secretary of Labor set in motion a mechanism whereby a diesel particulate standard could be set, and that the Secretary work in concert with the Bureau of Mines (BOM) and the National Institute for Occupational Safety and Health (NIOSH) to develop a sampling strategy and a program for its implementation. Subsequent to those deliberations, MSHA has been working closely with the BOM and NIOSH to develop methods for measuring diesel particulate and for the development of criteria for reducing miners' exposure to diesel particulate. In 1991, MSHA issued an advance notice of proposed rulemaking seeking additional information for the development of a rule. MSHA also held three workshops in 1995 that provided a forum for mine operators, labor unions, trade organizations, engine manufacturers, fuel producers, exhaust after-treatment manufacturers, and academia, to present and discuss information about technologies and approaches that can be utilized to limit the exposure of miners to diesel particulate. MSHA is currently using the information obtained from the advance notice of proposed rulemaking and the workshops to develop a proposed rule for reducing miners' exposure to diesel particulate.

The proposal generally followed the Advisory Committee recommendations for sampling and permissible exposure limits. Under the proposal, samples of carbon monoxide, nitric oxide and nitrogen dioxide would be taken weekly in the immediate return airways of each split of air where diesel equipment is used. When sampling results exceeded 50 percent of any permissible exposure limit set by the proposal, personal exposure monitoring would have been required. If personal exposure samples showed concentrations which exceeded 75 percent of the permissible exposure standard, sampling would continue each operational shift until, with 95 percent confidence, it was established that exposure was at or below the permissible level.

Commenters to the proposed rule generally accepted the need for regular sampling to evaluate miners' working conditions for the presence of potentially harmful gaseous diesel exhaust components. A number of commenters, however, noted that the proposed rule was too focused on sampling, and gave inadequate attention to requiring corrective action.

Some commenters recommended an alternative to sampling in return air courses. These commenters suggested a personal sampling approach keyed to the person in each mechanized mining unit likely to experience the highest diesel exhaust exposure. This ''designated occupation'' would be identified in the mine's ventilation plan. According to the commenters, this approach would recognize differences in mine configuration and mining methods.

Some commenters considered the proposed action level for area samples, set by the proposal at 50 percent of the permissible exposure limit values for the gaseous emission components being measured, to be reasonable. One commenter, in support of the action level concept, noted that sampling in the immediate return air course would measure the contribution of all diesel equipment on the mining section, thereby yielding readings that would give reasonable assurance that miners working on the section were protected.

Other commenters considered the 50 percent action level possibly too low for mines with naturally occurring ambient levels of carbon monoxide near the action level. Some of these commenters also foresaw possible problems at mines operating near the 50 percent action level. These commenters were concerned that an unnecessarily burdensome cycle of area sampling followed by personal sampling could result. Commenters also noted that the 50 percent action level could be raised because the permissible exposure limits themselves include a safety factor. No commenters offered data or specific support for a particular action level.

Commenters also expressed concern about how effectively the proposed sampling procedures would address variations in the concentration of diesel exhaust in miners' workplaces. A number of commenters suggested different strategies with more frequent samples to better monitor the presence of the gaseous components of diesel exhaust. Some commenters suggested special sampling to evaluate peak exposure when, for example, equipment was operated under load. Other commenters opposed such an approach, citing difficulties in determining when peak conditions might occur. Another commenter recommended, in addition to weekly samples in return air courses, weekly personal samples of each diesel equipment operator, and at the same time samples for at least two miners working inby all pieces of diesel equipment on the same split of air. According to this commenter, the suggested sampling strategy would yield better information about what diesel exhaust control measure modifications may be needed. Other commenters noted the dynamic nature of the underground mining environment, which varies the concentrations of diesel exhaust in miners' workplaces. These commenters recommended sampling be performed every shift in miners' work areas to timely detect the onset of elevated levels of diesel exhaust contaminants.

A number of commenters also noted that, in addition to sampling in the immediate return air course, attention should be given to the area of the section loading point. According to these commenters, diesel exhaust contaminants are often elevated at this location due to high engine loads at a single stationary point. Commenters also noted the need to address situations when diesels are used in locations outby the working faces. According to these commenters, construction projects can involve significant diesel usage at some mines.

The proposed rule did not specify sampling methods for evaluating the gaseous components of diesel exhaust. In the preamble discussion to the proposal, however, MSHA made reference to electrochemical analyzers and detector tubes as technology that could be used to determine concentrations of the gases to be measured. Commenters did not suggest specific sampling methods or object to those mentioned in the preamble discussion. Some commenters, however, emphasized that the methods chosen should not be highly technical in

nature. Several commenters urged that the task of sampling be something miners generally could perform with proper training.

As discussed elsewhere in this preamble, the final rule as a whole is designed to lay a foundation for the safe and healthful operation of diesel equipment in the confined, potentially explosive underground coal mine environment. To accomplish this objective, the final rule sets standards for diesel engines, suitable for mining. For the operation of this equipment, the final rule sets practicable standards for the use of low sulfur fuel and for adequate ventilation and proper maintenance of diesel equipment. These standards are intended to work together as an operating system to create a more healthful and safe working environment for miners.

Paragraph (a) of the final rule adopts a streamlined sampling strategy that is keyed to this operating system approach. The requirements of proposed § 70.1900 have been revised in the final rule to integrate sampling for gaseous components of diesel exhaust with existing on-shift workplace examination requirements and to take advantage of modern sampling instrumentation. The final rule also incorporates by reference the threshold limit values (TLV®'s) adopted by the American Conference of Governmental Industrial Hygienists (ACGIH). These TLV®'s are also incorporated by reference in MSHA's existing standards for exposure limits in § 75.322. The final rule retains the proposed action level concept with some modifications responsive to commenters. However, the final rule does not adopt the proposed requirement that area samples over the action level trigger personal sampling. Instead, paragraph (c) of the final rule requires corrective action to be taken immediately to reduce gaseous diesel exhaust concentrations to or below the action level. The final rule's sampling requirements are intended to provide a regular and timely check on how the total operating system of diesel exhaust control is working, with an emphasis on prompt corrective action.

Although the final rule does not require personal sampling, existing standards regulate miners' exposure to harmful airborne contaminants. These standards do not permit miner exposures over the established TLV®'s incorporated in this section of the final rule and in § 75.322. MSHA enforces these standards during mine inspections through personal and other sampling methods.

Like the proposal, paragraph (a) of the final rule specifies area samples in the ventilation return airways of each working section where diesel equipment is used, at a location which represents the contribution of all diesel equipment on the section. This approach was recommended by the Advisory Committee, and generally was supported by the commenters. In response to commenters, the final rule also requires samples in the area of the section loading point if diesel haulage equipment is operated on the working section, and at the point inby the last unit of diesel equipment on the longwall or shortwall face where mining equipment is being installed or removed. Depending on the mining system used, these are strategic locations in which to take area samples to evaluate the overall effectiveness of the control measures for diesel exhaust.

In addition, the final rule authorizes the MSHA district manager to specify area samples at other strategic locations on a mine-by-mine basis in order to accommodate circumstances which can result in significant concentrations of diesel exhaust. This aspect of the final rule responds to commenters' concerns about situations which can involve significant diesel usage in areas outby the working face, such as construction projects. The paperwork aspect of this provision results in a minimally increased burden since existing § 75.370 of this chapter requires that all underground coal mines have ventilation plans. Although this provision of the final rule is new, proposed § 75.390(b) would have required that the mine operator include certain minimum ventilation quantities in the mine's ventilation plan. Under the proposal, these minimum air quantities would have been related to the number of diesel-powered units operating and the air quantity necessary to control gaseous diesel emissions. Thus, this final rule provision is consistent with proposed § 75.390(b).

Monitoring of gaseous diesel exhaust components during the on-shift examination required by existing § 75.362 of this chapter makes checks for diesel exhaust concentrations part of the workplace examinations which have been historically conducted in the coal mining industry. On-shift examinations are designed to detect hazards which can develop during a working shift when normal mining operations are underway. Such examinations include tests for methane gas accumulations and oxygen deficiency, and determinations of air direction and velocity. Tests for diesel exhaust gases can be readily made during the on-shift examination by the same mine personnel. Currently, multi-gas detectors are available and in use in a significant number of mines in the industry which can sample simultaneously and directly read out results for methane, oxygen, carbon monoxide and nitrogen dioxide. Making checks of the mine's diesel exhaust control system part of the existing practice of on-shift examinations minimizes the burden of compliance with the final rule's sampling requirements. Under the final rule, special staff and a separate diesel exhaust sampling schedule should be unnecessary.

Sampling as part of the on-shift examination also increases the frequency of diesel exhaust concentration monitoring from the proposed weekly schedule, and responds to commenters who questioned the adequacy of the proposal in this regard. The final rule's increased frequency of sampling affords more timely and meaningful information about the performance of the mine's overall diesel exhaust control system. Diesel equipment is highly mobile and the mining environment changes rapidly as mine development progresses. Monitoring each shift alerts the mine operator to emerging problems with the control of diesel exhaust, before miners are overexposed to harmful contaminants.

Consistent with existing § 75.362 of this chapter, the final rule also requires sampling to be performed by a certified person designated by the operator. This aspect of the final rule is generally consistent with the proposal as it requires that competent persons perform the sampling, the results of which form the basis for important decisions about miners' work environments.

Under the final rule, sampling would be required for two gaseous components of diesel exhaust: carbon monoxide and nitrogen dioxide. The final rule does not retain the proposal for sampling sulfur dioxide when diesel fuel containing more than 0.25 percent sulfur is used. Section 75.1901 of the final rule requires the use of low-sulfur fuel at all times, rendering this aspect of the proposed rule unnecessary. The final rule also deletes the proposed requirement for sampling nitric oxide.

Both carbon monoxide and nitric oxide are produced in significant quantities when diesel engines operate under load. Elevated carbon monoxide is also indicative of engine faults such as misadjusted fuel systems, failure to derate engines for altitude, or dirty air cleaners. Conditions of use such as prolonged diesel engine idling can also produce elevated levels of carbon monoxide. Catalytic converters, designed to remove carbon monoxide

from the exhaust, work poorly under these conditions due to lower equipment operating temperatures.

Nitric oxide concentrations generally do not reflect engine faults. In addition, nitric oxide is readily converted to nitrogen dioxide in the mine atmosphere, making representative measurement difficult under the final rule's area sampling strategy. Also, in MSHA's experience the TLV® for carbon monoxide will be exceeded before the TLV® for nitric oxide. Sampling for nitric oxide, therefore, is not retained in the final rule.

The final rule also requires sampling for nitrogen dioxide. Nitrogen dioxide is readily detectable and potentially harmful to miners. The TLV® for nitrogen dioxide is 5 parts-per-million (ceiling), which cannot be exceeded at any time. Therefore, the final rule adopts the proposed requirement to sample for nitrogen dioxide.

The final rule addresses the collection of carbon monoxide and nitrogen dioxide samples with performance-based requirements. In response to commenters, the task of sampling is significantly simplified. The sampling requirements also emphasize prompt availability of sample results, consistent with the final rule's emphasis on corrective action to protect miners from the risk of overexposure.

Paragraph (b)(1) provides that monitoring of carbon monoxide and nitrogen dioxide is to be performed in a manner which makes the results available immediately to the person collecting the samples. This aspect of the final rule recognizes that direct-readout sampling instruments are now available that can measure carbon monoxide and nitrogen dioxide. Use of these hand-held instruments requires no specialized technical background so that persons may be easily trained to perform this task. Mine-wide monitoring systems, with properly located sensors, could also be employed to collect the required carbon monoxide and nitrogen dioxide samples.

Paragraph (b)(2) of the final rule generally adopts the proposal, and specifies that samples are to be collected by appropriate instrumentation that has been maintained and calibrated in accordance with the manufacturer's recommendations. These provisions establish sound practices necessary for accurate sample results, while retaining the flexibility for new instrumentation that may be developed in the future.

Paragraph (b)(3) requires that samples be collected during periods that are representative of conditions during normal operations. This aspect of the final rule is consistent with the proposal and serves the underlying purpose of the sampling requirements, which is to gauge the performance of the diesel exhaust control system under normal operating conditions. Like the proposal, the final rule does not prescribe special requirements to measure the performance of the diesel exhaust control system under peak load conditions. As some commenters noted, determining when peak load conditions occur would be difficult to predict. In addition, such an approach would increase the complexity of the final rule unnecessarily.

Regular sampling during on-shift examinations will afford a realistic picture of the performance of the diesel operating system. To meet the requirement that samples be taken during periods that are ''representative of conditions during normal operations,'' MSHA intends that tests for carbon monoxide and nitrogen dioxide be made when diesel-powered equipment is being used as it typically is in the mining process. Thus, for example, sampling is appropriate when diesel haulage equipment is moving coal or diesel-powered roof bolters are installing bolts.

Some commenters noted the need to monitor exhaust concentrations during longwall moves with diesel-powered equipment, expressing concern that moving the component parts of a longwall to a new block of coal for mining can involve heavy usage of diesel equipment over the course of multiple shifts. As a result, miners could be exposed to elevated levels of diesel exhaust gases. The final rule addresses these comments through the increased frequency of samples to monitor diesel exhaust gases. On-shift examinations are required under § 75.362 of this chapter when longwall moves are being performed and, under the final rule, tests of the concentrations of carbon monoxide and nitrogen dioxide are required at the point immediately inby the last piece of diesel equipment on the longwall or shortwall face. If these samples indicate carbon monoxide and/or nitrogen dioxide concentrations greater than the action level, immediate corrective action is required. This approach protects miners through early detection of elevated concentrations of diesel exhaust gases, and prompt adjustments to the mine's diesel exhaust controls.

Paragraph (c) of the final rule is modeled after other MSHA standards for potentially hazardous gases, such as methane, and requires immediate corrective action when sample results indicate gas concentrations exceeding the action level. This change in the proposal is responsive to commenters who pointed out that the proposal gave inadequate attention to corrective action. The final rule retains the proposed action level concept tied to the TLV®'s for carbon monoxide and nitrogen dioxide. The exposure limits incorporated are those already incorporated in existing § 75.322 of this chapter. These exposure standards are based on the 1972 threshold limit values set by the American Conference of Governmental Industrial Hygienists (ACGIH) and have applied to underground coal mines for nearly 25 years. This aspect of the final rule comports with the recommendation of the Advisory Committee that gaseous diesel exhaust components not be treated differently from contaminants generated by other mining sources. The final rule does not adopt updated permissible exposure standards at this time, as referenced in the proposal, because this issue remains in the rulemaking process for Air Quality standards.

Under paragraph (c) of the final rule, the action level is set at 50 percent of the TLV®'s for carbon monoxide and/or nitrogen dioxide for samples collected in the areas identified in paragraph (a). As noted in the proposed rule, an action level is used to minimize the risk that workers will be overexposed. An action level is not a compliance limit for miners' exposure. Instead, an action level is intended to provide a timely trigger for reviewing the mine's diesel exhaust control system. Exceeding an action level under the final rule is not, by itself, a violation.

The 50 percent action level concept is well-recognized in industrial hygiene practice as an effective, practical screening tool for minimizing the risk of workers' overexposure. This approach, based largely on statistical considerations, was developed by the National Institute for Occupational Safety and Health (NIOSH) for regulations promulgated by the Occupational Safety and Health Administration (OSHA), ''Leidel et al., NIOSH Publication No. 77–173.''. It is designed to afford a single value trigger for simplicity of application and to reduce exposure monitoring burdens. ''Patty's Industrial Hygiene and Toxicology, 1994, p. 528.'' Based on the work of Nelson A. Leidel and others, the 50 percent action level is considered a reliable indicator that there is a low probability of worker exposures which exceed the TLV® linked to the action level.

The action level of 50 percent of the TLV®'s for carbon monoxide and nitrogen dioxide is well-suited to the

purposes of this final rule, and will afford miners protection from overexposure to potentially harmful diesel exhaust emissions. Samples collected in accordance with paragraph (a) of this section will yield results showing the concentration of diesel exhaust emissions in key places under representative conditions on a regular basis. Applying the 50 percent action level to these routine sample results will account for sources of variability affecting miners' exposure, such as the diesel activity level, ventilation rates, and duty cycles. The action level also provides a simple means of evaluating the status of the mine's overall diesel exhaust control system. As discussed elsewhere, this operating system approach to the control of diesel exhaust emissions is a key underpinning of the final rule.

The final rule also permits adjustments to the 50 percent action level on a mine-by-mine basis. Under § 75.325(j) of the final rule the MSHA district manager may approve an alternative action level in the mine's ventilation plan. Ventilation plans are required for all underground coal mines by existing standards under § 75.370 of this chapter. Under the final rule, any change in the 50 percent action level must be based on the results of sampling which demonstrate that miners' personal exposure will not exceed the applicable TLV®. Thus, a mine operator may show that a 60 percent action level, for example, is appropriate for the miners working on a section. To do this, the operator must demonstrate through sampling that miners working on the section are not overexposed to diesel exhaust gases when samples in the immediate return air course show that concentrations of carbon monoxide and/or nitrogen dioxide are maintained at 60 percent of the TLV®. Based on this data, the 50 percent action level could be revised, with the approval of the district manager. The higher action level would be made part of the mine's approved ventilation plan and, thereby, become a compliance requirement at the mine. If, with experience, the revised action level was shown to be inappropriate, changes would be made through the mine ventilation plan approval process. Mine ventilation plans are required by existing standards to be reviewed at least every six months.

The sampling necessary to demonstrate that the personal exposure of miners would not exceed the TLV® is not specified by the final rule, recognizing that many approaches can be taken. For approval to revise an action level, however, MSHA will require clear evidence that a proposed change in an action level is appropriate. As discussed above, the purpose of an action level is to trigger a review of the mine's diesel exhaust control system before miners are overexposed to harmful gases. As the action level is raised closer to the TLV®, the reliability of the action level as a timely warning diminishes. Thus, MSHA does not anticipate approval of action levels that provide a nominal margin of protection.

The final rule does not specify what corrective action is required when an action level for carbon monoxide and/or nitrogen dioxide is exceeded. Instead, this determination is to be made by the mine operator, who is in the best position to implement changes appropriate to the situation and sufficient to promptly return carbon monoxide and/or nitrogen dioxide concentrations to or below the applicable action level. Corrective action may involve addressing ventilation deficiencies, controlling the number of diesel machines operating in an area, or correcting engine faults. Elevated levels of carbon monoxide and/or nitrogen dioxide may indicate that appropriate corrective action is revision of the mine's ventilation plan. Modifying the mine's ventilation plan integrates needed controls into the operating system for the mine.

The final rule does not retain the proposed requirement to conduct personal sampling when the action level for gaseous diesel exhaust components is exceeded. Proposed § 70.1901 therefore is not included in the final rule. While the Advisory Committee recommended a two-tiered approach of area sampling which could trigger personal sampling, MSHA believes that the final rule's sampling strategy will better protect miners. As discussed above, the sampling strategy adopted focuses on the performance of the mine's control system for diesel exhaust, rather than measurements of individuals' exposure levels. This approach safeguards miners from overexposure by frequent testing for gaseous diesel exhaust components in key areas, and establishing action levels for initiating corrective action that responds to emerging problems. In addition, MSHA mine inspections will include regular checks on miners' exposure to harmful airborne contaminants, including carbon monoxide and nitrogen dioxide, as part of determining compliance with the TLV®'s in § 75.322 of this chapter. MSHA's current practice is to sample, at least annually, all diesel equipment occupations on each mechanized mining unit. It is MSHA policy to also sample half of the diesel equipment occupations in areas outby the face. As a result, MSHA is confident that miners will be adequately protected.

The final rule changes also respond to commenters who objected to the proposed personal monitoring requirements as fostering excessive sampling. In its guidance comments, the Office of Management and Budget counseled that the criteria for personal monitoring had the potential for an unnecessarily burdensome paperwork loop in which a mine would be required to conduct area sampling one week and personal sampling the next week. Other commenters also foresaw the potential for a cycle of area sampling followed by personal sampling, particularly at mines with naturally occurring high levels of carbon monoxide. These commenters also objected to the proposal that when personal exposure monitoring results indicate levels greater than 75 percent of the permissible exposure limit, such sampling would be required to continue on each operational shift until compliance was established with 95 percent confidence. By focusing the final rule's sampling requirements on monitoring the performance of the mine's diesel exhaust control system and taking timely corrective action, this potential problem is eliminated.

The proposed rule recordkeeping requirements were tied to MSHA's proposed Air Quality standards in §§ 72.200 (d), (e), (f) and (g) of this chapter. Commenters objected to the proposal's reference to MSHA's proposed Air Quality standards concerning exposure monitoring and referenced the comments they had submitted on those proposed rules. Under the proposal, the results of miners' personal samples were to be maintained for 5 years and include personal identification information as well as data about sampling location, duration, and results. The proposed requirements also required a record of the corrective action taken if miners' exposure readings exceeded the permissible limit. In addition, the proposed rule set requirements for access to miners' personal exposure records, provided miners or their representatives with the opportunity to observe monitoring, and called for notification of miners when samples indicate they have had exposures exceeding the permissible limit.

In the Air Quality rulemaking, commenters objected to MSHA's proposal that adjustments to calculations of exposure be made for novel workshifts when a miner worked longer than eight hours. Commenters also objected to mine operators having to take corrective action to reduce

exposures based on one sample showing overexposure. In addition, commenters objected that it was burdensome to include the mine operator's corrective action in exposure monitoring records. Other commenters supported this requirement. These commenters further stated that the period for record retention should be 30 years for epidemiological purposes and to be consistent with the Occupational Safety and Health Administration's general industry requirements.

For the reasons discussed above, the final rule re-focuses sampling for the gaseous components of diesel exhaust on early detection of diminishing performance of the mine's diesel exhaust control system. As a result, personal samples are not required. Certain limited recordkeeping is, however, necessary to support the final rule's objective of tracking the performance of the mine's diesel exhaust control system. To accomplish this objective with the least recordkeeping burden, paragraph (d) of the final rule revises the recordkeeping requirements of the proposal, conforming them to the existing requirements for on-shift examinations. Under the final rule, a record is required to be made of the results of samples taken under this section which exceed the applicable action level for carbon monoxide and/or nitrogen dioxide. Like the proposal, the data to be recorded under the final rule include the location where the sample was taken; the concentration of carbon monoxide and/or nitrogen dioxide measured; and the corrective action taken to reduce the concentration of carbon monoxide and/or nitrogen dioxide to below the applicable action level. A record of the instrumentation used, which would have been required under the proposal, has not been adopted in the final rule, because this is not essential information under the sampling scheme of the final rule.

This aspect of the final rule is intended to minimize recordkeeping by requiring a record only when sample results are over the appropriate action level. This information is key to an effective monitoring system and provides essential data for assessing how the mine's diesel exhaust control system is functioning.

For ease of administration by mine operators, the final rule specifies that recordkeeping under paragraph (d) follow the same requirements contained in existing § 75.363 of this chapter. These standards prescribe the recordkeeping requirements for hazardous conditions found during a shift, including on-shift examinations. Section 75.363 of this chapter requires that the record be kept in a book maintained for the purpose on the surface of the mine, and that the record be completed by the end of the shift. Section 75.363 requires that the record be made by the certified person who conducted the examination, or a person designated by the operator. In the latter case, the certified person must verify the record by the end of the shift. Records made under § 75.363 also must be countersigned by the mine foreman or equivalent mine official by the end of the mine foreman's or equivalent mine official's next regularly scheduled working shift. These features of § 75.363 emphasize the importance of mine management using and responding to data about working conditions in the mine.

Section 75.363 also recognizes the use of electronic recordkeeping technology, provided it is made secure and not susceptible to alteration. MSHA encourages the use of such systems to ease recordkeeping burdens and facilitate analysis of this important information.

The final rule does not retain certain proposed recordkeeping requirements which related to personal exposure monitoring. These include notification of miners if they are exposed over permissible limits, the opportunity for miners to observe personal monitoring being conducted, and access to personal exposure records by miners and their representatives. Since personal sampling is not required by the final rule, these provisions of the proposal are no longer appropriate.

The final rule does, however, make results from area samples required by this section available for inspection by miners' representatives and MSHA inspectors through § 75.363 of this chapter. This aspect of the final rule is consistent with the statutory role of miners' representatives and facilitates meaningful mine inspections. The retention period for the records required by paragraph (d) is at least one year, through the existing requirements of § 75.363 of this chapter.

Paragraph (e) of this section of the final rule provides that exhaust gas monitoring be conducted in accordance with § 70.1900 as of 12 months after the publication date of the rule. This compliance deadline should provide mine operators with adequate time to implement the requirements of this section, and corresponds to the 12-month compliance deadline for the new ventilation requirements for diesel-powered equipment in § 75.325 of the final rule. Persons who are qualified to take the required gas measurements should be available at the mine, given the fact that air sampling for other gases, such as methane, is already required.

D. 30 CFR Part 75 Discussion.

Section 75.325 Air Quantity

Diesel engines produce exhaust containing carbon monoxide, the oxides of nitrogen, and particulate matter, presenting potentially serious health risks to miners. Ventilation systems at underground coal mines where diesel-powered equipment is operated must be designed to dilute and carry away diesel exhaust contaminants, to ensure that miners' exposure to contaminants is maintained within acceptable limits. This portion of the final rule establishes minimum air quantity requirements in areas of underground coal mines where diesel-powered equipment is operated. These requirements recognize that effective mine ventilation is a key component in the control of miners' exposure to diesel exhaust contaminants.

Air quantity requirements for diesel equipment were proposed in § 75.390. Under the final rule these requirements have been consolidated with the other air quantity requirements for underground coal mines located in existing § 75.325.

The final rule provides that the minimum air quantity required to ventilate an individual unit of diesel-powered equipment is the quantity listed on the equipment approval plate. The approval plate quantity, which is calculated under § 7.88 of the final rule for each engine model, is the amount of air necessary to dilute carbon monoxide (CO), carbon dioxide (CO_2), nitric oxide (NO), and nitrogen dioxide (NO_2) to the levels set by existing § 75.322 for those gaseous contaminants. This ventilation rate must be displayed on the engine's approval plate. The approval plate air quantity must be maintained: in any working place where an individual unit of diesel equipment is being operated; at the section loading point during any shift the equipment is being operated on the working section; in any entry where equipment is being operated outby the section loading point in areas of the mine developed on or after the effective date of the final rule; and in any air course with single or multiple entries where equipment is being operated outby the section loading point in areas of the mine developed prior to the effective date of the final rule. The district manager may also designate, in the ventilation plan, additional locations where minimum air quantities must be maintained for individual units of equipment.

In areas of the mine where multiple units of diesel-powered equipment are operated, the final rule provides that the minimum air quantity will be the sum of the approval plate air quantities of all of the equipment. The air quantity must be maintained in the last open crosscut of each set of entries or rooms in each working section; in the intake, reaching the working face of each longwall; and at the intake end of any pillar line. The final rule allows certain types of equipment to be excluded from the multiple unit calculation for air quantity, based on the fact that the emissions from those types of equipment would not significantly affect the exposure of miners to contaminants. The final rule also authorizes the district manager to allow reduced air quantities in the ventilation plan for multiple units of diesel-powered equipment, if the mine operator presents evidence that justifies the reduction. Under this section mine operators are also permitted to obtain district manager approval for an action level other than the 50 percent level specified in § 70.1900, if evidence submitted by the mine operator supports such a change.

The Diesel Advisory Committee recommended that MSHA establish minimum ventilating air quantities for areas of the mine where diesel-powered equipment operates, and that these minimum quantities be specified in the mine operator's ventilation plan. The Advisory Committee further recommended that required air quantities be based on the approval plate air quantities, with appropriate provisions made to address multiple units of equipment in the same air course. The Committee also concluded that allowances should be made for adjustment to minimum air quantities, if operating experience and workplace sampling indicate that such an adjustment is appropriate. Finally, the Committee recommended that a particulate index be developed for each piece of diesel-powered equipment and be reported on the engine approval plate.

Under the proposed rule, the minimum quantity of air in any split of air where an individual unit of diesel-powered equipment was operated would have been the approval plate air quantity. The minimum air quantity on any split of air where multiple diesel units were operating would have been calculated using the sum of 100 percent of the highest approval plate air quantity, 75 percent of the second highest approval plate air quantity, and 50 percent of any additional approval plate air quantities. This was referred to as the ''100–75–50'' approach during the public hearings and throughout the rulemaking process. Minimum air quantity requirements would also have applied when face equipment was being installed or removed.

The proposed rule would also have established a minimum ventilation quantity based upon the particulate index determined for each type of diesel engine. The particulate index would have specified the quantity of air needed to dilute the diesel particulate matter generated by the specific engine to 1 milligram per cubic meter of air. In some cases the minimum air quantity derived from the particulate index would have been greater than the air quantity specified on the machine approval plate.

A major concern of many commenters was the use of approval plate air quantities in establishing ventilation requirements for both individual and multiple units of diesel-powered equipment. A number of commenters stated that the air quantities specified on engine approval plates are not always necessary to dilute contaminants generated by the equipment to permissible levels. Several commenters expressed concern that the proposal represented a simplistic approach to complex issues, given the great variety of ventilation systems in underground coal mines.

Some commenters stated that determining minimum air quantities on a mine-by-mine basis was more appropriate than the across-the-board approach taken in the proposal. Most of these commenters stated that if a mine's air quality is acceptable, air quantity should not be an issue, advocating a performance-based approach. These commenters believed that the final rule should give mine operators much more flexibility than the proposal would in designing their ventilation systems.

A number of these commenters recommended that approval plate quantities be used only as a guideline for determining minimum air quantities for diesel equipment, and that a number of other variables be taken into account in determining the quantity of air needed to dilute exhaust contaminants. Commenters stated that such variables should include the minimum volume and velocity of air proposed by the mine operator; the number of diesel-powered units operating on the section; the equipment approval plate quantities; the duty cycles of the equipment; and the duty cycles of equipment that is not typically operating, such as equipment used for longwall moves.

Some commenters recommended the exclusion of certain equipment, such as limited class equipment and equipment that is vented directly into return air courses, from minimum air quantity calculations. Commenters also suggested that administrative and engineering controls designed to maintain contaminant levels within acceptable limits, as well as respiratory protection practices implemented at the mine, should be taken into account in calculating minimum air quantities.

One commenter pointed out that an engine's approval plate air quantity is based on the worst point of the operational range of the engine. The commenter further stated that this engine rating fails to take into account a number of factors that affect the gaseous emissions levels actually discharged into the mine environment, including the equipment power package; the engine duty cycle; the mine's elevation; the fuel used; and equipment maintenance.

Other commenters stated that the proposal would give no credit to mine operators who used low emission technology, and that consideration should be given to calculating approval plate quantities after rather than before exhaust gases are treated. Other commenters stated that approval plate air quantities were well below average ventilation quantities currently provided in any given split of air.

The final rule does not incorporate the approach advocated by several commenters for individual units of diesel-powered equipment. Instead, paragraph (f) adopts the proposed requirement and provides that the minimum ventilating air quantity where an individual unit of diesel- powered equipment is operated is the approval plate air quantity.

Although commenters are correct in stating that the goal of air quantity requirements is to ensure that exhaust contaminants produced by the diesel engine are diluted to within acceptable limits, thereby preventing overexposure of miners, a pure performance-oriented approach, based on sampling to determine whether contaminants are within acceptable limits, is not the best way to achieve this goal. Elimination of minimum air quantities and adoption of the performance-based scheme advocated by some commenters would by necessity demand an extensive and burdensome regimen of personal sampling to ensure that miners are not being overexposed. In contrast, the mandatory minimum ventilating air quantities in the final rule will give reasonable assurance that contaminant levels are being adequately controlled, while the sampling that an operator must perform has been minimized. The

amount of air required by the approval plate quantity to ventilate a diesel engine is a scientifically-based determination of the minimum air needed to maintain gaseous contaminants, particularly NO_2, within acceptable limits and avoid overexposures of miners. The sampling under the final rule confirms that the integrated system of protections—diesel engines that are well maintained and effectively ventilated—continues to function as intended.

The approach taken by the final rule is an effective method of minimizing miners' exposure to unhealthful diesel emissions. As explained above, the approval plate air quantity is derived from a mathematical determination of the amount of air that is needed to dilute CO, CO_2, NO, and NO_2 to the TLV®'s established in existing § 75.322, which have applied in underground coal mines for the last 25 years. The TLV®'s for these contaminants, with the exception of NO_2, are time-weighted averages, which means that the average concentration of the contaminant over an 8-hour period must be within allowable limits, although the levels of these contaminants may spike up significantly in excess of the TLV® in short excursions over the measurement period. In contrast, the NO_2 limit of 5 parts per million is a ceiling limit, which means that concentrations of NO_2 must never exceed the TLV®, even for a brief period of time. This is because elevated concentrations of NO_2 can be very toxic, and even short exposure to high levels of NO_2 can cause inflammation of the lungs, possibly resulting in pulmonary edema and lung hemorrhaging. The only external sign of NO_2 poisoning is shortness of breath. Sufficient dilution by adequate quantities of air of all contaminants, and in particular of NO_2, during the entire period that diesel-powered equipment operates is therefore essential in protecting miners' health.

It is important to note that the approval plate calculation assumes total mixing of the exhaust gases in the ventilating air, and that levels of exhaust gases that are higher than the TLV®'s will likely occur close to the machine's exhaust, before the gases are fully dispersed and diluted by the ventilating air. Essentially, this means that the approval plate air quantity represents the best-case scenario for contaminant dilution. The approval plate air quantity is therefore the smallest amount of air that will ensure that contaminants are within acceptable levels at all points in the engine's duty cycle.

It should also be noted that the oxides of nitrogen (NO and NO_2) have been the controlling gases for engine approval plate quantities for the vast majority of diesel engines that have been approved in the past. This means the approval plate quantity is determined by the air needed to dilute those two gases; a lesser quantity of air is sufficient to dilute the other gaseous contaminants produced by the engine. Although NO does not have the same toxic effects as NO_2, it does convert to NO_2 over time. As mentioned above, sufficient dilution of NO_2 is essential to protect miners from its potentially severe effects.

The approval plate air quantity calculation takes into account the worst operating point of a properly maintained engine tested under laboratory conditions. Some commenters asserted that approval plate air quantities were unnecessarily high, because the quantities were calculated for the worst operating point of the machine, when the machine generated the highest levels of gaseous contaminants. Although commenters are correct in stating that the approval plate calculation represents the air quantity needed to dilute contaminants at the point where the engine produces the highest level of emissions, diesel engine emission levels are high over a range of operating points. See, Report of the Bureau of Mines, U.S. Department of the Interior, ''Relationship of Underground Diesel Engine Maintenance to Emissions'' (December 1983). Contrary to the assertions of some commenters, the engine approval plate quantity does not represent an unrealistically high quantity of air, but is an accurate determination, based on testing, of the ventilating air quantity needed to protect miners working in the vicinity of the equipment over their working shift. Finally, as pointed out by one commenter, the approval plate air quantity is calculated using new engines, whose performance will likely degrade to some extent over time, with the potential for increased emission levels, even if the engines are well maintained.

The performance-based approach advocated by several commenters could provide another method for determining minimum air quantities, but, for the reasons stated earlier, would substitute a rather intricate sampling process that would result in a determination that essentially the same minimum air quantities are needed to ventilate the equipment. Mandating approval plate quantities as the minimum air quantities is not the only approach to ventilation of diesel-powered equipment, but it is the most workable and practical.

The final rule does not adopt the suggestion of commenters who advocated factoring in exhaust after-treatment in determining minimum air quantities. The after-treatment technology currently available is ineffective in reducing the oxides of nitrogen. Consequently, the gases used to determine the approval plate air quantities for the vast majority of diesel engines that have been approved cannot be controlled by existing exhaust after-treatment technology. This recommendation has therefore not been adopted in the final rule.

The locations where minimum air quantities must be maintained for individual units of diesel equipment have been modified in the final rule from what would have been required under the proposal. The proposal would have required minimum air quantities for individual units of equipment to be maintained in any split of air where the equipment was being operated. A number of commenters disagreed with this provision, stating that the term ''split'' was vague and ambiguous, and did not adequately specify areas of the mine where individual units of equipment were likely to operate and generate high levels of diesel exhaust contaminants. Commenters also identified outby areas and section loading points as locations where diesel exhaust levels tended to be a particular problem and where additional ventilating air was needed. Several commenters stated that it was essential to have adequate ventilation across the mine's dumping points to ensure that diesel emissions are swept out of the area. These commenters stated that the rule should also address outby operation of diesel-powered equipment, because excessive diesel emissions occur in idled areas of the mine and during non-production times, when less air is typically required for ventilation because dangerous levels of methane tend to be less of a problem during those periods. Other commenters were of the opinion that the rule should not designate locations where minimum air quantities must be maintained, and supported determining these locations on a mine-by-mine basis.

In response to commenters, the final rule does not adopt the proposed requirement that the air quantity for individual units of equipment be maintained in any ''split'' where the equipment was being operated. Instead, paragraphs (f)(1) through (f)(5) list the specific locations where the minimum air quantity must be maintained, and include those locations identified by commenters where diesel equipment is typically inadequately ventilated and

where levels of exhaust contaminants are likely to be high. These locations include any working place where the equipment is being operated; at the section loading point during any shift the equipment is being operated on the working section; in any entry where equipment is being operated outby the section loading point in areas of the mine developed on or after the effective date of the final rule; in any air course with single or multiple entries where the equipment is being operated outby the section loading point in areas of the mine developed prior to the effective date of the final rule; and at any other location required by the district manager and specified in the approved ventilation plan.

Paragraph (f)(1) provides that the minimum ventilating air quantity for an individual unit of diesel-powered equipment must be maintained in any working place where the equipment is being operated. This responds to commenters' concerns and clarifies the intent of the proposal, which would have required that the minimum air quantity be maintained in the ''split'' where the equipment operates. As discussed above, a number of commenters did not consider the term ''split'' to be sufficiently descriptive, and the final rule has been revised in response. Under the final rule required air quantities must be maintained in the ''working place,'' which is defined in existing § 75.2 as ''The area of a coal mine inby the last open crosscut.'' This location is designed to address ventilation of an individual unit of diesel-powered equipment that is working at an inby location, near the face.

Paragraph (f)(2) adds the specific requirement that the minimum air quantity for an individual unit of equipment be maintained at the section loading point during any shift that the equipment is being operated on the working section. This provision responds to commenters who singled out loading points as one of the locations where excessive levels of diesel contaminants were a particular problem. Commenters pointed out that the ventilating air quantities at these locations were frequently insufficient to dilute exhaust contaminants and protect miners from unhealthful levels of exhaust gases. Because different types of equipment move in and out of a section loading point on a regular basis, the minimum required air quantity will be the greatest approval plate quantity among all of the diesel-powered equipment that is operated at the loading point during the shift. This will ensure that miners are protected from overexposure to contaminants at all times during the shift, regardless of which unit of diesel equipment is at the loading point.

Paragraphs (f)(3) and (f)(4) have been added to the final rule to address the concerns of those commenters who stated that minimum ventilation requirements should apply to diesel-powered equipment that is being operated in outby areas. These two provisions, one of which applies to areas of the mine developed before the effective date of the final rule and the other which applies to areas developed on or after the effective date, recognizes that the ventilation system design at some mines with multiple common haulage entries would make it difficult, if not impossible, to maintain minimum air quantities in a single entry. Consequently, the final rule allows the minimum air quantity to be maintained in the air course rather than in a single entry, in areas of the mine developed before the effective date of the final rule. In areas of the mine developed on or after the effective date, the minimum air quantity must be maintained in a single entry. This means that mines with multiple common entries that use diesel equipment must alter their approach to future mine development no later than the effective date of the final rule.

This two-pronged approach to ventilation of outby diesel equipment recognizes that the location and direction of required air quantities have an impact on how effectively the air will dilute diesel engine emissions. Air that is coursed directly over diesel equipment will dilute contaminants more effectively than air of the same volume and velocity that is dispersed over a wider area. Consequently, providing the air quantity in a single entry rather than over multiple entries is a more desirable method of ventilation. However, this approach also takes into account that a number of mines would be unable to comply with the location requirements of (f)(3) in areas that have already been developed, without significant capital expenditures and substantial disruption of mining operations. This aspect of the final rule therefore strikes a balance between the concerns of commenters regarding adequate ventilation of diesel equipment operated in outby areas, and the economic infeasibility of a complete overhaul of areas of the mine that have already been developed.

It should be noted that § 75.1907 of the final rule does not require diesel equipment used in outby areas to have an engine approved under subpart E of part 7 of the final rule until 3 years after the publication date of this rule. During this transitional period, equipment with unapproved engines that do not have an approval plate will not be subject to the minimum air quantity requirements of the final rule. However, mine operators are under a continuing obligation to ensure that air contaminants are maintained within the limits established in § 75.322, and diesel-powered equipment must be ventilated with sufficient quantities of air to prevent overexposure of miners.

Paragraph (f)(5) has been added to the final rule to give the district manager the authority to require other locations where minimum air quantities for individual units of equipment must be maintained. These locations must be specified in the ventilation plan. This provision has been added in response to commenters who were concerned about inadequate ventilation in areas where diesel-powered equipment was operating, other than those locations specified in paragraphs (f) (1) through (4). These locations could include, for example, underground repair shops, permanent fuel storage facilities or temporary fuel storage areas, or construction sites where diesel-powered equipment is regularly operated and where minimum air quantities are needed to keep contaminant levels within acceptable limits.

The final rule adopts the proposal's approach of using the engine approval plate air quantity to determine the minimum air quantity in areas where multiple units of diesel-powered equipment are being operated. Paragraph (g) provides that the minimum ventilating air quantity where multiple units of diesel-powered equipment are operated on working sections and in areas where mechanized mining equipment is being installed or removed, must be the sum of 100 percent of the approval plate quantities for all of the equipment. As mentioned earlier, this is a change from the 100–75–50 percent approach of the proposal.

The final rule, like the proposal, also specifies certain equipment that may be excluded from the calculation of minimum air quantity, and also permits a mine operator to obtain a reduction in the required minimum air quantity for multiple units if sampling evidence establishes that a lesser ventilating air quantity will maintain continuous compliance with the TLV'S in § 75.322.

Several commenters advocated that approval plate air quantities be used only as guidelines for ventilation of multiple units of equipment, for the same reasons outlined in the discussion of ventilating air quantities for individual units of equipment. These commenters stated that there were a

number of variables that must be considered in establishing ventilation for diesel equipment, and advocated determining minimum air quantities on a mine-by-mine basis.

Some commenters were opposed to the 100–75–50 approach, stating that it would not adequately protect miners. These commenters took issue with the assumption that multiple units of diesel-powered equipment could not be operating at their worst point, i.e., generating the highest levels of emissions—simultaneously. Commenters also pointed out that the 100–75–50 approach assumed that engines perform at a consistent level from the day they are purchased until the end of their useful life, and advocated that the sum of 100 percent of the approval plate air quantities be used instead as the minimum ventilation quantity.

The final rule, like the proposal, specifies that engine approval plate quantities are the minimum ventilating air quantity for diesel-powered equipment. The approval plate quantity is required for multiple units for the same reasons that it is required for individual units: it is an accurate calculation of the amount of air that is needed to dilute gaseous diesel exhaust contaminants to acceptable levels. However, the final rule, like the proposal, allows mine operators to seek reductions in the required air quantities if they are able to demonstrate that contaminant levels will be kept within required limits at reduced ventilating air levels. This provision recognizes that, as stated by commenters, there may be variables of mine design, equipment operation, or ventilation in areas where multiple units operate that may result in less air being needed to keep air quality within healthful limits. For example, if the diesel machines on a section are not operated so that all machines are producing maximum emissions simultaneously, reduced minimum air quantities may be appropriate.

The final rule does not adopt the 100–75–50 approach, in response to commenters' concerns that it would not provide adequate protection for miners, and for several other reasons. First, the 100–75–50 formula was designed to account for differences in duty cycles among the equipment, since the approval plate air quantity is based upon the worst point of the operating range of the equipment relative to gaseous emissions. The 100–75–50 approach assumed, as has been pointed out by commenters, that multiple units of equipment would not have been operating at their worst points at the same time. As discussed above, although the approval plate air quantity is calculated for a worst case engine operating point, research has shown that engines generate high levels of contaminants over a range of engine operating points. The air quantity available on the section should be sufficient to control the engine emissions under all conditions.

The 100–100–100 approach also recognizes that approval plate air quantities will be calculated differently under part 7 than they have been under part 36, prior to the promulgation of this final rule. As discussed in the preamble to subpart E of part 7, an engine's approval plate air quantity under the final rule will be determined by the amount of air needed to dilute contaminants to the TLV®'s in § 75.322. Up until now, approval plate quantities have been determined under part 36 based on the amount of air needed to dilute contaminants to 50 percent of the TLV®'s that were in effect when part 36 was first promulgated in 1961. Although the levels to which CO and NO_2 must be diluted remain the same under the final rule, the dilution levels for NO and CO_2 are twice as high. Consequently, less air will be needed to dilute these two gases to the higher levels, and the approval plate quantity will be lower for most if not all engines. However, the approval plate quantity will now directly correlate to existing TLV®'s. It follows that 100 percent of the approval plate quantity, rather than some fraction thereof, must be provided to adequately dilute the gaseous diesel engine contaminants.

Approval plate quantities determined under the final rule may also be slightly lower than before under old part 36, as a result of the revision in part 36 that requires engines to be tested with 1.0 percent methane injected into the engine air intake, rather than the current 1.5 percent. Because injection of methane into the engine increases engine emissions, the lower concentration of methane used under the final rule will result in lower emissions and will require a lower quantity of air to dilute.

Because of these factors, the 100–100–100 calculation for multiple units of equipment will not result in minimum air quantities that are significantly greater than air quantities currently required in ventilation plans using the 100–75–50 method of calculation. In fact, in some cases, the air quantity required for multiple units may be less than what was required before, depending on the diesel equipment that is being operated.

Under the proposal, air quantities in excess of the 100–75–50 calculation for multiple units of equipment would have been required when the particulate index established for the equipment indicated that a greater air quantity was needed to maintain diesel particulate levels within acceptable limits. The particulate index indicates the quantity of air required to dilute particulate emissions from that specific engine to a concentration of 1 milligram per cubic meter of air. The 1 milligram value was chosen to make the use of a diesel particulate permissible exposure limit with an engine's particulate index a matter of simple multiplication, and is not meant to be an indicator of the level of any diesel particulate standard that may be set by MSHA in the future.

Under the proposal, MSHA intended to apply the particulate index in two phases, before and after the setting of a diesel particulate standard. Before the promulgation of a standard, MSHA intended to take an engine's particulate index into account in approving minimum air quantities in a mine operator's ventilation plan by estimating the contribution of diesel particulate to the total respirable coal mine dust concentration. After the promulgation of a diesel particulate standard, the minimum air quantity would be determined using the particulate index to calculate the air quantity needed to dilute the particulate concentration to whatever level was required.

A number of commenters stated that, because MSHA has not yet established a permissible exposure limit for diesel particulate, a requirement for increased air quantities based upon a diesel particulate index was inappropriate. Other commenters supported the use of a particulate index as a point of comparison among different diesel-powered engines, but they were strongly opposed to the use of the index to require minimum air quantities. Other commenters stated that accurate measurement of diesel particulate is not possible, because diesel particulate matter is indistinguishable from other respirable coal mine dust. One commenter stated that the particulate index fails to take into account that the diesel engine is itself only one factor in how cleanly the machine operates as a whole. This commenter recommended that other factors be considered, including the effectiveness of water scrubbers, dilutors, catalytic convertors, and particulate traps or filters, any one of which could significantly reduce diesel particulate emissions.

Although MSHA is currently developing a proposed rule to control miners' exposure to diesel particulate, MSHA agrees with commenters who believe that the use of the particulate

index for determining minimum ventilation requirements would be premature in the absence of a standard for diesel particulate. The final rule therefore does not adopt the proposal's requirement for increased air quantities based on a diesel engine's particulate index. However, MSHA will still calculate an engine's particulate index as part of the approval process. As was true under the proposal, the particulate index will be determined under part 7 of the final rule. The particulate index for the engine will be reported in the approval letter that MSHA sends to the engine manufacturer notifying the manufacturer that the engine has been approved. A copy of this letter also accompanies the equipment when it is purchased by the mine operator. The particulate index for all MSHA-approved diesel engines will also be included on MSHA's list of approved products, which is issued on a regular basis to the individuals and companies on MSHA's mailing list. MSHA anticipates that, until a diesel particulate standard has been set, mine operators and machine manufacturers will use the engine particulate index in selecting and purchasing engines. During this time mine operators may also use an engine's particulate index to roughly estimate the engine's contribution to the mine's levels of total respirable coal mine dust.

Under the proposal multiple units of equipment would have been required to be ventilated by specified minimum air quantities in the last open crosscut of each working section or in the intake splits of longwall sections. The proposed rule would also have required minimum air quantities to be maintained when face equipment was being installed or removed.

One commenter stated that air on a dieselized section should be coursed throughout the section and should not be concentrated in the last open crosscut. This commenter recommended that the total intake air quantity going into the section intake and the total return air quantity leaving the section should be measured. Another commenter stated that air measurements are more accurate in the immediate return of each split, rather than at the last open crosscut.

Several commenters pointed out that too much air across the face area was detrimental to the effective operation of respirable dust scrubbers on continuous miners. Several commenters identified longwall moves as periods when miners were exposed to high levels of diesel exhaust, due to the increased use of diesel-powered equipment on the sections during these periods and the increased diesel engine loads. These commenters stated that during longwall moves the exhaust from one diesel machine would be ''rebreathed'' by another diesel machine, resulting in a doubling of carbon monoxide levels.

Paragraphs (g)(1) through (g)(3) of the final rule set forth the specific locations where minimum air quantities must be maintained where multiple units of diesel-powered equipment are operating. Under the proposal, as described above, minimum air quantities would have been required in the last open crosscut of each working section or in the intake splits of longwall sections.

The final rule essentially adopts the approach of the proposal, although the term ''split'' used in the proposal has not been adopted in the final rule because, as explained in the discussion under paragraph (a) of this section, commenters considered the term ''split'' to be vague and ambiguous. The final rule provides more specific description of the locations where air quantities must be maintained, although the location requirements themselves are essentially the same as they would have been under the proposal. Paragraphs (g)(1) through (g)(3) of this section require the minimum air quantity in working sections to be maintained: in the last open crosscut of each set of entries or rooms in each working section; in the intake, reaching the working face of each longwall; and at the intake end of any pillar line.

The final rule does not adopt the suggestion of commenters that air measurements be taken at locations other than those specified in the proposal. The recommendation that the total intake air quantity entering a section and the total return air quantity leaving a section be measured has not been adopted because this method of measurement will not provide an indication of the air quantity that is actually reaching the working section. The air could be short-circuited before it reaches the diesel machine, but still be measured as part of the return air quantity. Further, the recommendation that air measurements be taken in the immediate return of each split, rather than at the last open crosscut, has not been incorporated into the final rule because measurement at that location will give a less accurate indication of the air that is actually ventilating the diesel equipment. Finally, the measurement of air quantities at the last open crosscut under the final rule is also consistent with air measurement requirements currently in most underground coal mine ventilation plans.

The final rule does not respond to commenters who stated that too much air across the face area could have a negative impact on the effectiveness of respirable dust scrubbers on continuous miners. While it is true that increased air quantities could in some cases have an adverse effect on dust scrubber effectiveness, this impact must be balanced against the need to control harmful diesel exhaust contaminants. There are other dust control technologies that are available to supplement dust scrubbers if the need arises.

In response to the many commenters who expressed concern about exposure of miners to high levels of diesel exhaust contaminants during installation or removal of longwall equipment, the final rule adopts the proposed requirement that minimum air quantities be maintained in areas where mechanized equipment is being installed or removed.

Paragraphs (h)(1) through (h)(4) of this section of the final rule, like the proposal, allow certain types of equipment to be excluded from the minimum air quantity calculation of paragraph (g). The rationale behind these exclusions is that the specified equipment is operated or ventilated in such a way that it does not significantly affect the exposure of miners to diesel exhaust contaminants. Commenters were generally in favor of allowing certain equipment to be excluded, such as equipment with light-duty cycles or equipment that is only used intermittently. One commenter stated, however, that MSHA should verify information submitted by the operator to support exclusion of equipment, and that the final rule should require mine operators to notify miners or their representatives to allow them to comment on the operator's request for exclusion of equipment from the air quantity calculation.

In response to this comment the final rule, unlike the proposal, requires district manager approval of all exclusions and requires the exclusions to be specified in the ventilation plan. This will allow MSHA review of all equipment that will be excluded from the air quantity calculation, and responds to commenter concerns about MSHA verification of excluded equipment. Additionally, requiring excluded equipment to be specified in the ventilation plan will ensure that miners and their representatives, who are required under existing regulations to be provided with proposed revisions to an operator's ventilation plan, are notified of an operator's intention to exclude certain equipment. This

responds to commenters who advocated that miners' representatives be notified of and be given an opportunity to comment on such matters.

Paragraph (h)(1) allows the exclusion of self-propelled equipment meeting the requirements of § 75.1908(b) of the final rule. The proposal would have allowed the exclusion of the limited class of equipment meeting the requirements of proposed § 75.1908, except diesel-powered air compressors that are regularly used. The requirements of proposed § 75.1908 included specific objective criteria limiting equipment horsepower and weight. In response to commenters and for reasons explained in detail in the preamble to § 75.1908, equipment categories are defined in the final rule by the equipment function rather than by weight or horsepower. Equipment that meets the requirements of § 75.1908(b) is light-duty equipment that does not, among other things, cut or move rock or coal or move longwall components. Because the equipment is not operated under heavy load, it is not expected to produce high levels of exhaust emissions, and may therefore be excluded if specified in the mine operator's approved ventilation plan. Although the proposal did not explicitly limit the exclusion to self-propelled equipment, as does the final rule, the only portable equipment included in the proposed limited class was compressors and welders, and compressors were not eligible for exclusion under the proposal if they were regularly operated. The final rule takes a different approach and only includes self-propelled light-duty equipment in the automatic exclusion under paragraph (h)(1), because some types of non-self-propelled light-duty equipment, such as compressors and generators, can produce high levels of exhaust emissions. However, light-duty equipment that is not self-propelled whose emissions would not significantly affect the exposure of miners may be excluded from the air quantity calculation if approved by the district manager under paragraph (h)(4).

Also eligible for exclusion, under paragraphs (h)(2) and (h)(3), is equipment that discharges its exhaust into an intake air course that is vented directly into a return air course, or that discharges its exhaust directly into a return air course. Paragraph (h)(3), which exempts equipment vented directly into a return air course, has been adopted without change from the proposal. Paragraph (h)(2), which exempts equipment that discharges its exhaust into intake air that is coursed directly to a return air course, has been added to the final rule to be consistent with other MSHA regulations, which require certain equipment, such as electrical equipment, to be vented either directly into a return air course or into an intake air course that is coursed directly into a return air course. The rationale for both of these exceptions in the final rule is the same: that the diesel exhaust of equipment that discharges into a return air course or into an intake air course that goes directly into a return air course will not, in most cases, come into contact with miners because most of them will be working in intake air in the face area where production occurs. Commenters did not indicate any opposition to the reasoning behind these exceptions.

Paragraph (h)(4), like the proposal, allows mine operators to obtain MSHA approval for the exclusion of other equipment from the air quantity calculation in paragraph (g). Equipment may be excluded under this paragraph if its duty cycle is such that the emissions would not significantly affect the exposure of miners. Mine operators who seek to exclude equipment must identify the equipment in the ventilation plan that is submitted to MSHA for approval. Equipment that may be eligible for exclusion under paragraph (h)(4) includes equipment with a very small engine (less than 10 horsepower) or heavy-duty equipment that is operated infrequently, for very short periods of time, or when other diesel equipment normally operated on the section is shut down or not operating. An example of equipment that could be considered for exclusion under this paragraph is a supply vehicle that is driven up to the section, shut down and unloaded, started up and immediately driven off of the section. Equipment that is operated in a location so that its exhaust does not pass over miners could also be eligible for this exclusion. All other equipment, such as nonpermissible heavy-duty equipment and face equipment which discharges its exhaust into an intake air course of the working section, must be included in the minimum air quantity calculation required by paragraph (g).

Paragraph (i) of the final rule, like the proposal, allows the district manager to approve a lesser air quantity than what would otherwise be required under paragraph (g) for multiple units of diesel equipment. The final rule allows such a modification if sampling results demonstrate that miners exposure to diesel contaminants will not exceed applicable TLV®'s at the modified ventilation quantity.

The proposed rule would have allowed the district manager to approve lesser air quantities for multiple units of equipment if the results of a comprehensive personal monitoring program indicated that contaminant exposure levels were below 75 percent of the applicable contaminant standards with 95 percent confidence. The proposed rule also specified the information that mine operators would have been required to submit to MSHA for consideration in reducing minimum air quantities, including the actual sampling plan and an evaluation of the sampling results.

Some commenters were opposed to requiring a 95 percent confidence level for the sampling used to support a reduction in air quantity, stating that this requirement was too technical and unrealistic for practical application. Some commenters strongly opposed allowing reduction of air quantities under the procedure set forth in the proposal, stating that miners and their representatives would not be given sufficient opportunity to participate in the process. One commenter advocated use of petition for modification procedures under section 101(c) of the Federal Mine Safety and Health Act when mine operators seek to revise their ventilation plans, stating that under these procedures miners and miners' representatives would have the right to review and comment on the proposed plan modifications.

The final rule takes a more performance-oriented approach to reduction in minimum air quantities, and requires that samples of contaminants demonstrate that a lesser air quantity will maintain contaminant levels within permissible limits. This is consistent with the streamlined procedures for contaminant sampling in § 70.1900 of the final rule, and also responds to commenters' recommendations that this aspect of the rule should be less technical.

The objective of this aspect of the final rule is the same as that of the proposal: that reduction of minimum air quantities required by the final rule is permitted if a mine operator can establish that miners will not be overexposed to gaseous diesel exhaust contaminants at the lesser ventilating air quantities.

The final rule does not adopt the suggestion of commenters that reductions in air quantity be granted only under the modification procedures of section 101(c) of the Mine Act. Since the time of the submission of these comments, MSHA has issued a final rule governing underground coal mine ventilation, which includes revisions to the existing ventilation plan submission and approval process [61 FR 9764] and addresses several of these commenters' concerns. The revised ventilation rules

provide an increased role for the representative of miners in the ventilation plan approval process. Mine operators are now required to notify the representative of miners at least 5 days before a ventilation plan or plan revision is submitted to MSHA for approval, and make a copy of the proposed plan or plan revision available for inspection to the miners' representative. The representative of miners is given the opportunity to submit written comments to MSHA for consideration during the plan review process. Under this process, operators seeking reduction in the minimum air quantities required under paragraph (g) are required to notify miners' representatives, who then have the opportunity to comment on the reduction. No provisions have therefore been made to address these comments in the final rule, because the comments have already been addressed appropriately in the revised ventilation rule.

Paragraph (j) allows modification of the 50 percent action level specified in § 70.1900(c) if sampling results demonstrate that miners will not be exposed to contaminants that exceed permissible limits at the modified action level. As described in detail in the preamble discussion for § 70.1900, any change to the action level must be based on the results of sampling that demonstrate that miners' personal exposure will not exceed the applicable TLV®.

Paragraph (k) provides that, as of 12 months after the publication date of the final rule, the ventilating air quantity required where diesel-powered equipment is operated shall meet the requirements of paragraphs (f) through (j) of this section. Compliance with the ventilation requirements of the final rule will in some cases require modifications to the mine's ventilation system. These revisions, along with other information required to be specified in the mine ventilation plan under paragraphs (f) through (j) of this section, should be included in a revised ventilation plan submitted to MSHA for review and approval.

Section 75.371 Mine Ventilation Plan; Contents

The requirements for diesel-powered equipment that are included by the final rule in existing § 75.325 identify information that must be specified in the mine operator's ventilation plan. Existing § 75.371, which lists the information that must be provided by mine operators in their mine ventilation plans, is amended by the final rule to conform to the new requirements in § 75.325.

As was true under the proposal, minimum air quantities for individual units of diesel-powered equipment are not required to be included in the ventilation plan, because individual units are required to be ventilated with at least the engine approval plate air quantity while they are operating. The final rule does require that the ventilation plan specify where air quantity will be maintained at the section loading point for individual units of equipment, as well as any additional locations required by the district manager where a minimum air quantity must be maintained for an individual unit of equipment.

The final rule, like the proposal, requires the ventilation plan to specify ventilation quantities for multiple units of equipment, as well as to include a description of equipment that is excluded from the multiple unit calculation of § 75.325(g).

Existing § 75.371(r) is revised by the final rule to include a cross-reference to § 75.325 (d), (g), and (i). Paragraph (r) requires the ventilation plan to identify the minimum quantity and the location of air that will be provided during the installation and removal of mechanized mining equipment, as well as the ventilation controls that will be used. The addition of a cross-reference to § 75.325 clarifies that minimum air quantity requirements for diesel-powered equipment must be considered when determining ventilation quantities during mechanized equipment installation and removal.

New paragraph (kk) has been added to § 75.371 and provides that the ventilation plan shall include any additional areas designated by the district manager under § 70.1900(a)(4) of the final rule for CO and NO_2 sampling. As explained in more detail in the preamble to § 70.1900, the district manager is authorized under the final rule to require sampling in strategic locations on a mine-by-mine basis, in order to address situations involving significant concentrations of diesel exhaust. Paragraph (kk) conforms the content requirements for ventilation plans to this new provision.

New paragraph (ll) provides that the ventilation plan must specify the location where the air quantity will be maintained at the section loading point.

New paragraph (mm) provides that the ventilation plan include any additional locations required by the district manager, under § 75.325(f)(5), where a minimum air quantity must be maintained for an individual unit of diesel-powered equipment.

New paragraph (nn) provides that the ventilation plan must specify the minimum air quantities that will be provided where multiple units of diesel-powered equipment are operated. To comply with this requirement, mine operators should indicate the equipment that is being used in the normal mining cycle, and the minimum air quantities that must be provided to ventilate the specified equipment.

New paragraph (oo) provides that the ventilation plan must specify the diesel-powered equipment excluded from the calculation under § 75.325(g). MSHA does not intend that this provision require the itemization or the serial numbers of specific equipment. Instead, the mine operator should provide a general description that is sufficient to identify the types of equipment that are excluded from the calculation.

New paragraph (pp) conforms ventilation plan content requirements to §§ 70.1900(c) and 75.325(j), and provides that the ventilation plan shall identify any action levels that are higher than the 50 percent level specified by § 70.1900(c). As described in greater detail in the preamble discussion of § 70.1900, mine operators may obtain a higher action level if they are able to demonstrate that miners will not be overexposed to contaminants at the higher level. If a higher action level is approved by the district manager under § 75.325(j), it must be specified in the mine ventilation plan.

Section 75.1900 Definitions

This section of the final rule contains definitions of terms used in subpart T of part 75. These definitions are provided to assist the mining community in understanding and complying with the requirements of the final rule. As a general matter, terms which are unique to the final rule are defined, while those terms that are commonly used and understood in the mining industry have not been included for definition.

The proposed rule defined two terms: ''fixed underground diesel fuel storage facility'' and ''mobile underground diesel fuel storage facility''. The final rule adopts the proposed definition for ''fixed underground diesel fuel storage facility'', although the term itself has been slightly modified, with the substitution of the word ''permanent'' for the word ''fixed'' to more accurately reflect the nature of the facility. A ''permanent underground diesel fuel storage facility'' is defined as a facility designed and constructed to remain at one location for the storage and dispensing of diesel fuel, and which does not move as mining progresses. Such facilities are designed to remain at

one location for an extended period of time. Additionally, the final rule also adopts, with slight modification, the proposed definition for ''mobile underground diesel fuel storage facility'', although that term has been changed in the final rule to ''temporary underground diesel fuel storage area'' to be more accurately descriptive. A ''temporary underground diesel fuel storage area'' is defined as an area of the mine provided for the short-term storage of diesel fuel in a fuel transportation unit, which moves as mining progresses.

The final rule also includes additional definitions for the terms ''diesel fuel tank'', ''diesel fuel transportation unit'', ''noncombustible material'', and ''safety can''.

Several commenters believed that the definitions in the proposal were too narrow in scope and did not accurately reflect the different fuel storage facilities currently in use in underground coal mines or the different applications of mobile diesel-powered equipment. These commenters recommended the definition of two additional categories of underground diesel fuel storage facilities: ''temporary'' and ''self-propelled.'' Commenters offered definitions for these two additional types of facilities, but they have not been adopted in the final rule, although, as mentioned above, the word ''temporary'' has been substituted for the word ''mobile'' in describing areas provided for short-term fuel storage that move as mining progresses. The suggested definition for ''self-propelled diesel fuel storage facility'' has not been included because it is similar in function and definition to a ''diesel fuel transportation unit,'' which has been defined in the final rule.

The definition offered by commenters for ''temporary diesel fuel storage facility'' reflected commenters' concerns that the proposed construction requirements for mobile fuel storage facilities were too extensive, and would make it difficult for the facility to move with the section and keep pace as mining progressed. Commenters therefore recommended the creation of a category of fuel storage facility with more flexibility than the mobile storage facilities under the proposal.

In response to these comments, requirements for temporary fuel storage are addressed separately from those for permanent facilities in the final rule, and reflect a more practical approach to temporary fuel storage, which is explained in detail in the discussion of § 75.1903, below. A definition for ''temporary fuel storage facility'' is consequently unnecessary and has therefore not been adopted in the final rule.

One commenter recommended that several other terms be defined in the final rule, including ''container,'' ''safety can,'' ''tank,'' and ''fuel transportation unit.'' This commenter pointed out that these terms are used throughout subpart T, and definition of these terms would enhance understanding of the requirements of the final rule.

MSHA agrees that definition of certain terms will facilitate compliance with the requirements of subpart T, and has therefore included definitions for ''diesel fuel tank,'' ''diesel fuel transportation unit,'' ''noncombustible material,'' and ''safety can.'' Because the term ''fuel storage container'' is not used in the final rule, a definition for this term is not included in the final rule.

The term ''diesel fuel tank'' is defined in the final rule as a closed metal vessel specifically designed for the storage or transport of diesel fuel. Metal tanks are required based on metal's demonstrated ability to contain diesel fuel in the event of a fire, documented by the Bureau of Mines in a 1985 Report of Investigation entitled ''Fire Tests of Five-Gallon Containers Used for Storage in Underground Coal Mines'' (RI 8946). This type of construction is also consistent with the National Fire Protection Association (NFPA) ''Standards for Portable Shipping Tanks for Flammable and Combustible Liquids'', (NFPA 386).

The term ''diesel fuel transportation unit'' is defined as a self-propelled or portable, wheeled vehicle used to transport a diesel fuel tank. This definition includes diesel-powered vehicles such as lube units, maintenance trucks, tractors, and scoops. This definition also includes locomotives that pull rail-mounted, portable diesel fuel transportation units. Under the final rule fuel transportation units must be wheel-mounted, since skid-mounted units are more likely to be damaged during loading and unloading in a scoop bucket or while being dragged through the mine. Required safety features for these units are contained in § 75.1902 and §§ 75.1904 through 75.1906 of the final rule. Additionally, self-propelled fuel transportation units that are diesel-powered, and diesel-powered equipment used to tow portable fuel transportation units are considered heavy-duty equipment under § 75.1908(a). Heavy-duty equipment must be provided with the safety features specified in § 75.1909, including an automatic fire suppression system and additional specifications for the equipment's braking system.

Under the final rule, permanent underground diesel fuel storage facilities must be constructed of ''noncombustible materials,'' and stationary tanks in those facilities must be placed on 12-inch supports constructed of ''noncombustible material.'' ''Noncombustible material'' is defined in the final rule as a material that will continue to serve its intended function for 1 hour when subjected to a fire test incorporating an ASTM E119–88 time/temperature heat input, or equivalent. This test, contained in the publication ''Standard Test Methods for Fire Tests of Building Construction and Materials'' of the American Society for Testing and Materials, is used to establish fire resistance ratings in minutes or hours for a particular building assembly such as a roof, wall, or beam. This means that a material maintains its integrity under a fire exposure test used by the building industry to classify assemblies for their ability to resist fire. This definition is consistent with the definition of ''noncombustible material'' in existing § 75.301, which applies to the construction of ventilation controls in underground coal mines.

One commenter who recommended that ''noncombustible material'' be defined in the final rule suggested that the definition specify a 2-hour fire rating. The definition in the final rule specifies a 1-hour rating, which will provide protection in the event of a fire in underground fuel storage areas by confining the fire within the area for a sufficient period of time to allow miners to safely evacuate the mine. Additionally, the final rule requires automatic fire suppression systems and audible and visual alarms for permanent underground fuel storage facilities. For these reasons, adequate protection of miners against fire is provided, and a 2-hour fire rating has not been adopted in the final rule.

The term ''safety can'' is defined in the final rule as a metal container with a nominal capacity of no more than 5 gallons used for storage, transport, or dispensing of diesel fuel that is listed or approved by a nationally recognized independent testing laboratory. Commenters supported the use of approved safety cans to transport small amounts of diesel fuel. This definition provides assurance that adequate construction and performance specifications for fire protection are met. The limitation on the capacity of safety cans to no more than 5 gallons will control the amount of diesel fuel being transported and minimize potential fuel

spillage. Such specifications and limitations are necessary in light of accident reports of 10 fires in Canadian mines that resulted from diesel fuel spillage during refueling.

A safety can that meets this definition could be listed by Underwriters Laboratories or approved by Factory Mutual, Inc. Some nationally recognized independent testing laboratories have established specific construction specifications for the type and thickness of materials; material strength, stability and resistance to leakage; and standards for fire exposure that ensure that the can will safely vent if exposed to a heat source such as a fire.

The final rule defines ''safety can'' as a metal container. Thus, a plastic safety can listed or approved by a nationally recognized independent testing laboratory would not be acceptable under the final rule. A metal container is specified because metal is superior to plastic in containing diesel fuel in the event of a fire. The safety advantage provided by metal cans has been documented in the 1985 Bureau of Mines' Report cited earlier. Specific design requirements for safety cans are addressed in § 75.1904 of the final rule.

Section 75.1901 Diesel Fuel Requirements

This section of the final rule establishes specifications for the fuel used in diesel-powered equipment in underground coal mines. Satisfying the requirements of this section will lower diesel engine gaseous and particulate emissions, and will reduce equipment maintenance by limiting the amount of sulfur in the fuel. The risk of fire in underground coal mines is also reduced by the minimum flash point for the fuel required by the final rule. The safety benefits that result from this aspect of the final rule are particularly important in the confined environment of an underground coal mine.

Paragraph (a) of this section requires that diesel fuel used in underground coal mines contain no greater than 0.05 percent sulfur and have a flash point of 100° F (38° C) or greater. The final rule also requires the mine operator to provide an authorized representative of the Secretary, upon request, with evidence that the diesel fuel purchased for use in diesel-powered equipment underground meets these requirements.

The proposed rule would have required ASTM D975 No. 2D diesel fuel, with a flash point of 125° F or greater, at standard temperature and pressure. Many commenters objected to the requirement for ASTM D975 No. 2D diesel fuel, stating that the reference to No. 2D fuel was a manufacturing classification, did not describe a type of diesel fuel that was commercially available, and would unnecessarily limit the use of diesel fuel in underground coal mines.

MSHA agrees with commenters that the proposed fuel specifications do not describe a fuel that is commercially available, and the fuel specifications contained in the final rule respond to these comments. The reference to ASTM D975 No. 2D diesel fuel has been eliminated, and a minimum flash point and maximum sulfur content for diesel fuel have been specified. The fuel described by the final rule is in widespread use throughout the United States, and is easily obtained by mine operators. The fuel specifications in the final rule are based on Environmental Protection Agency on-highway fuel requirements for commercially available diesel fuel.

A number of commenters were concerned that the required flash point of diesel fuel not be set too low, stating that any diesel fuel specifications must keep the fuel within the class of combustible liquids, ensuring that hazards associated with diesel fuel are no greater than those associated with other combustible liquids used underground. Some of these commenters recommended that the flash point for diesel fuel be set at 140° F, stating that lower flash points would increase the risk of vaporization and increased aromatic content, especially at warmer mine temperatures. These commenters stated that increased aromatic content has an effect on particulate emissions.

Other commenters stated that the proposed flash point of 125° F was too high. Some commenters reported that the flash point of diesel fuel is intentionally lowered when fuel suppliers mix it for a winter blend, to depress the cloud point of the diesel fuel and reduce the temperature at which the fuel begins to jell. These commenters believed that a flash point of 125° F would virtually eliminate their ability to use diesel-powered equipment in cold temperatures, unless the rule specifically allowed the use of winter blends of diesel fuel with flash points below 125° F. These commenters pointed out that the ASTM 975 specification for diesel fuel is being changed to lower the minimum flash point of D1 diesel fuel to 100° F (38° C) when the cloud point is lower than 10° F, and that a reduction of the flash point in the final rule was appropriate.

Another commenter believed that the diesel fuel autoignition point does not change in the lower range of flash point for diesel-powered equipment, concluding that the safety of diesel fuel exposed to hot surfaces would not change with changing flash points.

No demonstrated hazard exists to justify raising the flash point of diesel fuel above the proposed flash point of 125° F. However, MSHA acknowledges commenters' concerns that the proposed flash point may unintentionally limit the use of diesel fuel during the winter. To address this issue, the flash point has been lowered in the final rule to 100° F (38° C) or greater.

Several commenters suggested that the terms ''flash point'' and ''combustible liquid'' be defined, with some commenters offering recommended language for the definitions. The final rule does not include definitions for these terms. The term ''flash point'' is commonly understood in the mining industry to mean the lowest temperature at which a liquid will give off sufficient vapor to ignite on application of a flame, and does not need to be defined in this rule. The suggested definition offered by commenters for the term ''combustible liquid'' specifies a flash point temperature. Because the final rule sets a minimum flash point temperature for diesel fuel, such a definition is unnecessary.

The proposal did not set a limit on sulfur content for diesel fuel, but would have required sampling for sulfur dioxide when diesel fuel was used that contained more than 0.25 percent sulfur. This approach was taken because, although the proposal recognized that use of low sulfur fuel was desirable, it was not readily available nationwide at the time the proposal was published in October 1989.

Some commenters stated that the sulfur content of diesel fuel should be limited in all cases to 0.25 percent. Others stated that a sulfur content requirement should be phased in, ultimately reaching the Environmental Protection Agency's maximum sulfur level of 0.05 percent. One commenter stated that a requirement for low sulfur fuel would provide a health benefit to miners by reducing particulate emissions.

MSHA agrees that the sulfur content of diesel fuel should be kept at a low level. Sulfur in diesel fuel contributes to diesel particulate emissions. Additionally, some types of exhaust after-treatment technology designed to lower hazardous diesel emissions work better when the sulfur content in the fuel is low. More effective strategies for after-treatment technology will result in reduced hydrocarbons and carbon monoxide levels. Low sulfur fuel also

greatly reduces the sulfate production from the catalytic converters currently in use in underground coal mines, thereby decreasing exhaust pollutants. Today, low sulfur fuel is readily available and widely used by on-road commercial vehicles. For these reasons, the final rule requires that diesel fuel contain no greater than 0.05 percent sulfur, which fuel is readily available nationwide.

Under § 70.1900 of the proposal, mine operators would have been required to provide MSHA with a certified statement if the sulfur content of the fuel used in their diesel equipment was 0.25 percent or less. This provision was included with exposure monitoring requirements because use of high sulfur fuel under the proposed rule would have triggered weekly area sampling requirements. Specifications for diesel fuel are now addressed in paragraph (a) of this section of the final rule, and the operator's obligation to verify the fuel's sulfur content has also been included in this section.

The final rule requires the mine operator to provide to an authorized representative of the Secretary, upon request, evidence that the diesel fuel purchased for use in diesel-powered equipment underground meets the requirements of paragraph (a). This will not be a burdensome requirement. MSHA anticipates that the mine operator's contract with the mine's fuel supplier will document the type of fuel that is being purchased. The verification required under this paragraph may also be provided by a copy of a fuel analysis, which can be performed by a supplier's quality control laboratory or a private laboratory at minimal or no cost to the operator. MSHA recognizes that purchase orders and invoices may be kept at a mine's administrative office rather than at the mine site. Although the final rule does not specify a location or manner of recordkeeping for the document evidencing diesel fuel content, the mine operator may choose to keep an additional copy of the document to be easily accessible to a representative of the Secretary. A small recordkeeping burden is estimated for this requirement under the Paperwork Reduction Act of 1995.

Paragraphs (b) and (c) of this section of the final rule address additives for diesel fuel used in diesel-powered equipment in underground coal mines. The requirements of these two paragraphs were not part of the proposal but have been added to the final rule in response to commenters' concerns over the types of substances that could be safely added to diesel fuel.

Paragraph (b) prohibits the addition of flammable liquids to diesel fuel. One commenter expressed concern that the proposed rule would not prohibit flammable liquids, such as gasoline, from being mixed with diesel fuel underground to assist in machine starting and operation during cold weather. Because gasoline is highly flammable, adding it to diesel fuel could cause the flash point of the fuel to drop below 100° F (38° C) and transform the fuel into a flammable liquid. Further, use of gasoline as a diesel fuel additive could ruin an engine's fuel system by reducing the lubricating properties of the fuel. In response to these concerns, the final rule prohibits the addition of flammable liquids, such as gasoline, to diesel fuel. This restriction will promote the safe use of diesel fuel underground.

Kerosene, on the other hand, is commonly used as a cutter stock for lowering the cloud point in diesel fuel. Because kerosene has a flash point above 100° F (38° C) it is classified as a combustible rather than a flammable liquid and therefore may be added to diesel fuel under the final rule.

Paragraph (c) permits only diesel fuel additives that have been registered with the Environmental Protection Agency (EPA) under 40 CFR Part 79 [59 FR 33042] to be used in diesel-powered equipment underground. Because the proposed rule was silent on whether the use of diesel fuel additives would be permitted, a number of commenters raised additives as an issue and advocated that the final rule permit them to be used. These commenters stated that additives served to depress the cloud point of diesel fuel during cold weather to prevent jelling of the fuel. A cloud point depressant works by breaking down larger size crystals to smaller crystals, thus allowing the fuel to flow more freely. Several commenters expressed concern about the effect additives may have on diesel exhaust particulate emissions when mixed with diesel fuel. Other commenters wanted to be permitted to use additives, such as barium additives, with diesel fuel used to power equipment underground. One commenter stated that MSHA should encourage further research on the use of additives.

The wide variety of diesel fuel additives currently on the market makes control of the use of these additives difficult. The final rule addresses this issue by limiting fuel additives used underground to those registered under specific EPA regulations.

EPA regulations at 40 CFR Part 79 forbid manufacturers from placing any fuel additive into commerce unless the additive has been registered with the EPA Administrator. The EPA registration process requires the submission of extensive test data for specific health effect endpoints, as well as a general systemic and organ toxicity literature search on the health and welfare effects of the fuel additive emissions, including the characteristics of the emissions. Registered fuel additives are maintained by the EPA on a list that is available to the public.

The requirements of this paragraph do not place an undue burden on mine operators, because operators need only verify with their fuel supplier or distributer that the additive purchased is included on the EPA registration list.

Section 75.1902 Underground Diesel Fuel Storage—General Requirements

This section of the final rule provides general requirements for the safe storage of diesel fuel underground. These requirements are intended to minimize risks associated with fire hazards in the areas where diesel fuel is stored. This section limits the receptacles that may be used for diesel fuel storage underground to diesel fuel tanks and safety cans; allows only one diesel fuel transportation unit in a temporary fuel storage area; places a 1000-gallon limit on the capacity of stationary diesel fuel tanks in permanent fuel storage facilities; and limits the location of permanent fuel storage facilities and temporary fuel storage areas underground.

A number of commenters were concerned about the additional hazards that would be created by the storage of a combustible—diesel fuel—in underground coal mines. Some commenters opposed any type of fuel storage underground, while others believed that diesel fuel can be safely stored. Those commenters who opposed the storage of diesel fuel underground stated that it would present numerous safety hazards, including an increase in the probability of the fuel becoming involved in a mine fire and cutting off the avenue of escape for miners. These commenters recommended that language in existing MSHA regulations at § 31.9 (c)(2) and (c)(3) be incorporated in the final rule. These regulations address refueling of diesel locomotives underground and provide that, whenever possible, locomotive fuel tanks be filled on the surface; contain specific requirements when locomotives are refueled underground; and prohibit underground fuel storage.

Commenters opposed to allowing storage of diesel fuel underground suggested that mine operators could file a petition for modification under Section 101(c) of the Mine Act if they

had a compelling need to store diesel fuel underground. These commenters felt that a case-by-case approach would more effectively address hazards associated with diesel fuel storage.

Commenters were also concerned with maintenance and upkeep of diesel fuel areas. These commenters stated that fuel spills and hose leakage could possibly contribute to fire hazards. Commenters expressed reservations about storage, transport, and dispensing of diesel fuel from 5-gallon cans, particularly during refueling, stating that temporary storage should not be allowed. These commenters wanted assurance that if diesel fuel storage were allowed underground, protections such as fireproof enclosures and pumps and other provisions that address fuel spillage would be provided.

Some commenters suggested that diesel fuel storage should be allowed only if it is tightly controlled, and that fuel spills must not be tolerated in areas of the mine that cannot be cleaned. A number of commenters recommended setting limits on the maximum quantity of fuel allowed on a production section, ranging from a 24- to a 48-hour supply. Other commenters supported permitting diesel fuel storage underground, but raised a number of issues related to fuel storage, such as appropriate construction requirements for underground facilities; fire protection; and the logistics of transporting and dispensing fuel in an underground environment. One commenter cited years of positive industry experience with safe underground storage and transport of diesel fuel. He stated that his own experience in safely operating an underground coal mine, including diesel fuel delivery, storage, transport and transfer, countered the proposition that proliferation of diesel fuel storage facilities would occur in an uncontrolled manner, resulting in unlimited quantities of diesel fuel being stored in underground mines.

MSHA has carefully reviewed all of the comments in determining how to address the storage of diesel fuel underground. Both MSHA and industry experience demonstrate that diesel fuel can be safely stored underground in limited quantities under controlled conditions. Allowing limited storage on the section will minimize other safety concerns cited by commenters, such as fuel leaks and spills. Underground fuel storage will also eliminate the need for frequent fuel trips, thus reducing hazards that are inherent in the transportation of diesel fuel. MSHA does not believe that it is useful or practical to restrict diesel fuel quantities based on projected use. The final rule instead sets specific gallon limits on the capacity of underground fuel storage tanks.

The final rule establishes safety requirements, including design and performance specifications for storage tanks, transportation vehicles, and cans for fuel storage; a limitation on the number of fuel storage units that may be parked on a section; and a limitation on the capacity of underground fuel storage facilities. MSHA believes that these requirements will provide a significant measure of additional protection from the hazards associated with the storage and handling of diesel fuel, and permit efficient and safe transportation and refueling of diesel equipment in underground coal mines. Under the final rule, miners are afforded protections that are equal to or greater than the protections of existing standards.

Paragraph (a) of this section provides that diesel fuel shall be stored in: (1) Diesel fuel tanks in permanent underground diesel fuel storage facilities; (2) diesel fuel tanks on diesel fuel transportation units in permanent diesel fuel storage facilities or temporary diesel fuel storage areas; or (3) safety cans. The proposal did not explicitly limit fuel storage underground to tanks and safety cans, and would have required that diesel fuel be transported in containers specifically designed for the transport of diesel fuel.

MSHA recognizes that large quantities of diesel fuel must be used in some mines. However, to protect against fires, spills, and other hazards, large quantities can only be stored in permanent facilities under this final rule.

The final rule permits fuel storage in tanks on fuel transportation units, but only under certain conditions and in limited quantities spelled out in other requirements in this section. A number of commenters recommended that the rule accommodate the need for fuel supplies to move as the production section moves. Other commenters expressed concerns that multiple mobile storage tanks might be located on the section at the same time, exposing miners to hazards, particularly from fire. The final rule also allows diesel fuel to be stored in safety cans.

The restrictions contained in paragraph (a) respond to commenters' concerns that storage of diesel fuel underground would lead to prolific, uncontrolled storage practices, and strictly limit the locations and receptacles for diesel fuel storage.

Paragraph (b) of this section limits the capacity of stationary diesel fuel tanks in permanent underground fuel storage facilities to 1,000 gallons. It is important to note that, while the total capacity of the fixed tanks is set, there is no limit on the number of stationary tanks that may be located in the facility. This means that the 1,000 gallons may be stored, for example, in two 500-gallon tanks or four 250-gallon tanks.

Like the final rule, the proposal prohibited storage of more than 1,000 gallons of diesel fuel in a permanent facility. Commenters' opinions of this provision varied, from those who opposed any kind of fuel storage underground, those who recommended limited storage, to those who believed that diesel fuel could be safely stored underground. The final rule balances the concerns raised by those opposed to storage against the need to store fuel underground to minimize other fuel handling hazards. The fire protection and construction requirements for fixed storage tanks and permanent storage facilities in §§ 75.1903 and 75.1904 of the final rule appropriately and adequately address fire and other hazards involving diesel fuel, and, when satisfied, will afford safe storage of the fuel quantities allowed under this section.

Under the final rule, the storage of safety cans and parking of fuel transportation units in permanent storage areas would also be permitted. The 1,000-gallon limit applies to the total capacity of stationary tanks in the fuel storage facility, and the quantity of fuel in safety cans stored or fuel transportation units parked in the facility would not be counted as part of the 1,000-gallon limitation under this paragraph.

The final rule permits storage of diesel fuel on a working section or in an area of the mine where equipment is being installed or removed, but places specific restrictions on such storage in paragraphs (c)(1) through (c)(4) of this section.

The proposal did not separately address storage of diesel fuel on a working section. MSHA received many comments both opposing and supporting section fuel storage. Those opposed stated that storage on the section would present fuel leakage and spillage hazards, creating fire and escape hazards for miners. Those supporting fuel storage on the section stated that, because the production section advances rapidly, the final rule must permit diesel fuel storage on the section. These commenters further stated that properly designed fuel transportation units should be allowed on mining sections, as long as they are parked within reasonable proximity to

the work area and comply with specific safety requirements.

MSHA agrees with commenters who supported allowing mobile fuel storage on the section, which can move as mining progresses, but also agrees with commenters who believe that such storage must be carefully controlled. In response to these concerns, paragraph (c)(1) permits only one temporary diesel fuel storage area for each working section or in areas of the mine where equipment is being installed or removed. Paragraph (c)(2)(i)–(iii) requires that the temporary fuel storage area be located within 500 feet of the loading point; within 500 feet of the projected location of the future loading point where equipment is being installed; or within 500 feet of the location of the last loading point where equipment is being removed. This requirement will ensure that the fuel storage area will be located close enough to miners to allow any hazards that may develop to be quickly addressed. This provision is a logical outgrowth of the rulemaking because it addresses commenters' concerns that fuel storage be allowed in close proximity to the mining section, while at the same time recognizing that safety concerns dictate limitations on where fuel may be stored.

Consistent with the final rule's approach of allowing limited storage on the section, paragraph (c)(3) prohibits more than one diesel fuel transportation unit at a time to be parked in a temporary diesel fuel storage area. This requirement is consistent with sound fire protection engineering principles for the storage and handling of diesel fuel, and is supported by experiences in the field and applicable NFPA standards. It should be noted, however, that a ''parked'' diesel fuel transportation unit under this paragraph would not include a unit that is in the process of refueling equipment or that is itself being refueled. This means, for example, that a temporary fuel storage area could contain more than one diesel fuel transportation unit at one time, so long as only one unit is parked. Any other units in the area must be in use and attended.

The proposal would have allowed fuel to be stored in free-standing tanks in mobile diesel fuel storage facilities. The final rule allows fuel to be stored in temporary fuel storage areas, but only in tanks on diesel fuel transportation units. These units are specially designed to provide both mobility and protection for the fuel tanks. Protection is provided by requiring the tank to be permanently affixed to the transportation unit. The construction and design requirements for fuel tanks are contained in § 75.1904 of the final rule.

Paragraph (d) of this section of the final rule imposes limitations on the location of permanent fuel storage facilities and temporary fuel storage areas, and has been revised from the proposal for clarity. This aspect of the final rule requires diesel fuel to be kept out of areas where the potential for fire is greatest. The final rule prohibits permanent storage facilities and temporary storage areas from being located within 100 feet of shafts, slopes, shops, or explosives magazines, or within 25 feet of trolley wires or power cables, or electric equipment not necessary for the operation of the storage facilities. The fuel storage facilities or areas must also be in a location protected from damage by other mobile equipment.

Some commenters stated that the proposed requirement that diesel fuel storage facilities be located at least 100 feet away from shafts, slopes, or shops was not adequate in light of the amount of diesel fuel involved and the amount of spillage that could occur. Another commenter stated that requiring shops to be located at least 100 feet away from fuel storage facilities was inconsistent with proposed § 75.1903(c), which would have prohibited welding and cutting within 50 feet of storage facilities. The commenter also noted that in some cases it may be best to locate the fuel storage facility within 100 feet of the shop near a return, because this would provide the best direct ventilation to the return for both the shop and storage facility, but that the proposed 100-foot requirement could prevent this. The final rule, like the proposal, adopts separation distances that are consistent with the National Fire Protection Association 123 Standard for Fire Prevention and Control in Bituminous Coal Mines. NFPA 123 requires fixed combustible liquid storage areas to be located a minimum of 100 feet from explosive magazines, electrical substations, shaft stations, and shops. MSHA disagrees with commenters who considered a 100-foot separation distance insufficient in light of the amount of diesel fuel that could be stored. The design, construction, and fire suppression system requirements in the final rule that apply to permanent fuel storage facilities provide adequate protection to miners with a 100-foot separation distance.

MSHA also disagrees with the commenter who believed that requiring shops to be located at least 100 feet away from fuel storage facilities, where cutting and welding are likely to occur, was inconsistent with a prohibition against welding and cutting within 50 feet of storage facilities. The high volume of vehicle traffic in and out of the area of the shop warrants a greater separation distance than for cutting and welding alone.

Finally, the final rule does not adopt the recommendation of the commenter who advocated allowing a permanent fuel storage facility closer to a shop than 100 feet, to allow better ventilation of both the shop and the storage facility. The fire protection afforded by the 100-foot separation distance outweighs any advantage in ventilation that would result from allowing a lesser distance.

Paragraph (d)(3) provides that permanent fuel storage facilities and temporary fuel storage areas must be in a location that is protected from damage from other mobile equipment. Under the proposal, fuel storage facilities would have been required to be at least 25 feet away from haulageways, which are entries where miners and materials are normally transported. The rationale for this requirement was that areas where diesel fuel is stored should be out of the line of mine traffic, where tanks would be exposed to damage from collision with other mine vehicles. Instead of adopting the proposed requirement, the final rule takes a performance-oriented approach by providing that storage facilities and areas be located where they are protected from damage. This responds to a commenter who indicated the importance of keeping fuel storage facilities out of the line of traffic.

Paragraph (e) prohibits permanent fuel storage facilities from being located in the primary escapeway, which provides miners with a route of escape from the mine in the event of an emergency. This restriction was not included in the proposal, but has been added to this section of the final rule in response to commenters' concerns relative to diesel fuel storage facilities' impeding miners' ability to escape in the event of a mine fire, explosion, or other emergency. This prohibition recognizes that the primary escapeway should be kept clear of obstructions and potential hazards, to ensure that miners are able to safely evacuate the mine in the event of an emergency.

Section 75.1903 Diesel Fuel Storage Facilities And Areas; Construction And Safety Precautions

This section of the final rule establishes construction and design requirements for permanent diesel fuel storage facilities and temporary diesel fuel storage areas. These requirements are intended to minimize fire hazards associated with storage of diesel fuel

underground, and provide safety protections for miners during the storage, transportation, and dispensing of diesel fuel.

The proposal did not distinguish between construction and design requirements for those diesel fuel storage facilities that are fixed and remain in one location indefinitely, and those that move as the production section advances. A number of commenters stated that the proposed requirements were suitable for permanent facilities but were unnecessary and impractical for facilities that would be temporary. Some commenters were concerned that some mine operators would not be able to complete construction of the temporary facility before the facility would have to be moved to keep pace with the advancing section. In support of this position, commenters stated that compliance with the proposed requirements would be impractical and would force mine operators to transport fuel to the section to refuel equipment on a shift basis, creating increased hazards due to transportation.

Another commenter voiced similar concerns, noting that the rapid advance of mining in modern underground coal mines makes it more practical for fuel stations to be advanced with mining activity, and that properly designed transportation units should be allowed on mining sections as long as they are parked in accordance with specific safeguards in reasonable proximity to the working area. The commenter stated that a specific parking requirement with proper safeguards would be much safer than the requirements in MSHA's proposal. Another commenter stated that the Diesel Advisory Committee made general recommendations for permanent and temporary storage facilities that were not intended to eliminate fuel trailers and their use. On the other hand, several commenters believed that the fact that the proposal would not have required mobile storage facilities to have a drain system and sump would provide no incentive for operators to construct fixed facilities, and that the construction of an unlimited number of mobile facilities would result.

In response to the comments, the final rule reflects a clear distinction between construction and design requirements for permanent underground diesel fuel storage facilities and temporary underground diesel fuel storage areas. MSHA recognizes that temporary diesel fuel storage areas move frequently as mining advances, and that construction specifications must take this fact into account. Requirements for permanent storage facilities have therefore been addressed separately from those for temporary facilities in the final rule. The final rule provides a more practical approach for the construction and design of areas designated for temporary fuel storage, and eliminates several proposed construction requirements that are unnecessary from a fire protection engineering standpoint. Specifically, the final rule does not adopt the proposed requirements that temporary fuel storage areas be constructed of noncombustible material, be provided with a self-closing door, and be provided with a fire suppression system. Because construction of temporary storage areas with these features would make it extremely difficult for these facilities to be built as fast as mining progressed, transportation of fuel between permanent storage facilities and the section would increase significantly. The risk of an accident involving a fuel transportation unit would also increase, and with it the risk of fuel spillage and the risk of fire. The final rule therefore reduces the construction requirements for temporary fuel storage areas, to provide better control of the fire hazards inherent in fuel transportation and storage.

Paragraphs (a)(1) through (a)(7) of this section establish construction and design requirements for permanent underground diesel fuel storage facilities. Consistent with basic fire protection engineering principles, the final rule requires permanent storage facilities to be constructed of noncombustible materials; provided with self-closing doors or a means for automatic enclosure, and with a means for entry and exit after closure; ventilated with intake air; equipped with an automatic fire suppression system; and provided with a means to contain diesel fuel and with a concrete floor or equivalent to prevent spills from saturating the mine floor. These requirements are intended to reduce the fire hazards inherently present in areas where diesel fuel is stored and increase protection in the event of a fire.

The proposal contained requirements similar to those in the final rule, but the final rule has been modified in response to commenters. Some commenters were generally opposed to the proposed requirements, stating that diesel fuel systems currently in use do not pose the degree of hazard that would warrant such extensive requirements. One commenter stated that the requirements of the proposal suggested that the hazards of diesel fuel storage exceed the hazards of the storage of explosives underground by several-fold. Other commenters stated that the proposed requirements for construction of storage facilities with noncombustible materials and with a means for automatic enclosure were too vague and not stringent enough. These commenters recommended that MSHA require at a minimum that diesel fuel be stored in an enclosure with at least a 2-hour fire-resistance rating.

Paragraph (a)(1) provides that permanent underground fuel storage facilities shall be constructed of noncombustible materials, including floors, roofs, roof supports, doors, and door frames. Exposed coal within the fuel storage areas is required to be covered with noncombustible material. If they are used, bulkheads are required to be built of or covered with noncombustible material.

The proposal would have required that the storage facility be constructed of noncombustible material, a term that was not specifically defined. As discussed above, the term ''noncombustible materials'' is defined in § 75.1900 of the final rule as materials meeting the equivalent of a one-hour fire resistance rating test. Paragraph (a)(1) also incorporates NFPA 123 requirements. These requirements clarify which components of the facility must be noncombustible, including floors, roofs, roof supports and door frames, and specify that exposed coal must be covered with noncombustible material and bulkheads either built of or covered with noncombustible materials.

MSHA's Approval and Certification Center has established guidelines to determine the suitability of trowelable or sprayable coatings for protecting coal surfaces against fire, which meet the requirements of paragraph (a)(1). In addition, textile-type thermal barriers may also be used to provide isolation of the combustible surfaces within the storage facility. Materials meeting the ''Performance Criteria for Materials used for Welding and Cutting Curtains and/or Thermal Barriers in Underground Coal Mines'' (Luzik, MSHA Report No. 01–098–92) may also be used. MSHA has also established guidelines for noncombustible doors. Additionally, MSHA has tested certain designs of high-temperature silica fabric curtains and published the results in *Coal Magazine,* June 1993, pp. 102–104, ''MSHA Develops New Fire Resistant Check Curtains''. For purposes of the final rule, MSHA will accept as doors the curtain constructions described in this article. Facilities constructed to meet these requirements will afford protection to miners working in the production areas inby in the event of a fire and should provide ample time for miners to exit.

Paragraph (a)(2) of the final rule requires that permanent fuel storage facilities be provided with either self-closing doors or a means for automatic enclosure. This paragraph provides mine operators with flexibility in the method used to comply with the final rule. The proposal would have required that the facility be provided with a means for automatic enclosure, which suggests that the door must be closed by powered means, such as electrically or pneumatically. The proposal did not specifically include non-powered self-closing doors as an alternative, although they were not intended to be excluded. Self-closing doors serve the same function in containing a fire as automatic-closing doors, and the final rule clarifies that they are permitted.

Paragraph (a)(3) requires that permanent fuel storage facilities be provided with a means for personnel to enter and exit the facility after closure. This provision has been added to the final rule to ensure that miners who are inside the fuel storage facility when the automatic enclosure activates will be able to exit from the facility. This requirement is also intended to allow miners to gain access to the facility to suppress an incipient fire that may develop. This paragraph also requires a means for exit and entrance when self-closing doors are used. Self-closing doors that are specifically designed to be manually opened would be in compliance with this paragraph. This aspect of the final rule is necessary to prevent miners from being trapped in the facility, and is a logical outgrowth of the rulemaking.

Paragraph (a)(4) of this section of the final rule requires that permanent fuel storage facilities be ventilated with intake air that is coursed into a return air course or to the surface and that is not used to ventilate working places, using ventilation controls meeting the requirements of existing § 75.333(e). The proposal would have required that both fixed and mobile fuel storage facilities be ventilated directly into a return air course using noncombustible materials for ventilation controls. Some commenters stated they were already venting fuel storage areas in their mines directly to the return.

The final rule adopts the proposed requirement only for permanent fuel storage facilities, with some modification. The final rule requires that the facility be ventilated with intake air coursed to a return air course or to the surface that is not used to ventilate working places. This language, which is consistent both with existing requirements at § 75.340 for the ventilation of underground electrical installations and with the current definition of ''return air'' in existing § 75.301, is intended to eliminate the confusion caused by the phrase ''directly to a return air course''. The final rule clarifies that the intake air ventilating the fuel storage facility may not be used to also ventilate active working places. Thus, the air may be coursed into other entries before being coursed into a return, so long as the air is not used to ventilate a working place.

Temporary underground diesel fuel storage areas are not required to be vented directly to the return in the final rule, in response to commenters who advocated more flexibility and less restrictive requirements for temporary fuel storage that moves as mining progresses.

If the permanent facility is equipped with self-closing doors that would normally be closed, an opening will have to be provided in the doors to allow intake air to flow through the facility. This opening will prevent the build-up of diesel fuel vapors in the facility and prevent smoke generated during the incipient stages of a fire from entering the intake air courses. The opening is not intended to prevent smoke and other products of combustion from backing up into the intake airway if the fire is not extinguished in its incipient stages. For automatic closing doors, which would normally be open, a vent in the doors may not be needed since enclosure is required to seal the facility to cut off oxygen to the fire after the doors have closed.

The requirements of paragraph (a)(4) are also intended to ensure that, if an enclosure has self-closing doors that are normally closed, precautions are taken to adequately vent diesel exhaust emissions from the facility. Such precautions could include the use of a regulator in the door to bring air into the facility that would then be vented to the return. In the case of a diesel fuel transportation unit that must have its engine running to dispense fuel, the unit's exhaust could be vented either directly to the return, if it incorporates a power package approved under subpart F of part 7, or into intake air which is coursed directly to a return air course. A fuel transportation unit that is equipped with a subpart F-approved power package will have fire and explosion prevention features that would permit the engine to exhaust directly into the potentially methane-rich atmosphere of the return. When the unit is exhausted into intake air, the fire and explosion prevention features of a subpart F power package are not required. However, the emissions from the engine must be vented directly to return air to prevent unnecessary exposure of miners to diesel exhaust.

Paragraph (a)(5) adopts the requirements of the proposal and provides that permanent fuel storage facilities must be equipped with an automatic fire suppression system that meets the requirements of § 75.1912 of the final rule. This paragraph also includes an additional requirement, not included in the proposal, that actuation of the automatic fire suppression system shall initiate the means for automatic enclosure. One commenter stated that the proposed requirement for automatic enclosure was not sufficiently stringent, that these storage facilities should be designed with fire containment capability, and that automatic enclosure should be triggered by actuation of the automatic fire suppression system. MSHA agrees, and the final rule enhances the capabilities of the automatic fire suppression system by requiring that initiation of the system will activate closure of the doors to the facility if self-closing doors are not used. Operation of the system in an environment with minimal air movement, which would exist when the doors are closed, will improve the effectiveness of fire suppressant agents in extinguishing a fire.

Paragraph (a)(6) requires that permanent fuel storage facilities be provided with a means of containment capable of holding 150 percent of the maximum capacity of the fuel storage system. This provision is intended to address hazards associated with diesel fuel spillage and leakage—both slip and fall and fire hazards. The proposal would have required that permanent facilities be equipped with a drain system and a sump capable of holding 150 percent of the maximum capacity of the fuel storage system. Instead of requiring a drain system and sump, the final rule requires a ''means of containment''. This change acknowledges that a suitable drain system is generally considered overly difficult to design and install, and will also allow more flexibility in design of fuel containment systems. Additionally, spilled diesel fuel is best left confined in the facility where the fire suppression system is located. One commenter offered a case that illustrates this principle where the fuel escaped into the mine during a fuel spill because the drain valve at the bottom of the remote sump that serviced the storage area was left partially open.

It is important to note that, in cases where fuel is piped from the surface to an underground fuel storage facility, the containment capacity must account for

the total fuel capacity. This means that the capacity of the containment must equal at least 150 percent of the surface tank's capacity, plus 150 percent of the underground tank's capacity, plus 150 percent of the volume of the piping system connecting the surface tank to the underground tank. In cases where there is no underground tank, the maximum capacity includes the surface storage tank and the piping system from the surface. Where a stationary tank is located in a permanent facility and is not connected to a surface tank, the means of containment must account for 150 percent of the capacity of the largest stationary tank. If the underground fuel storage facility is not equipped with a stationary tank but is used for the storage of only diesel fuel transportation units, the single largest transportation unit tank would be counted in the maximum capacity for purposes of this paragraph. However, diesel fuel transportation units that may be parked in permanent fuel storage facility where a piping system from the surface terminates or where a larger stationary tank is housed would not be considered part of the ''fuel storage system'', and the capacity of the transportation unit tank would not be included. The rationale behind this is that only one component in a fuel storage facility would be expected to fail at one time, such as a burst piping system or a leak in a stationary tank or in a transportation unit tank.

In support of the requirement of this paragraph, one commenter noted that a fuel spill occurred when valves in the piping system from the surface storage tank failed, allowing the static head pressure to be imparted on the dispensing hose which caused it to rupture and fuel to escape.

Commenters stated that it is important that the storage location be designed to contain fuel spills and tank ruptures to stop the spread of fuel. The final rule's containment capacity requirement of 150 percent of the capacity of the fuel system will provide a prudent safety factor in view of the potential fire hazard created by the release of large amounts of diesel fuel into an underground mine.

Paragraph (a)(7) has been added to the final rule and requires that permanent fuel storage facilities be provided with a competent concrete floor or equivalent to prevent fuel spills from saturating the mine floor. This provision is intended to ensure that spilled diesel fuel can be easily cleaned up and will not accumulate, creating a fire hazard. This requirement is added in the final rule in response to commenters who suggested that the floor of the storage facility should be noncombustible and impermeable to oil and diesel fuel. These commenters argued persuasively that a requirement for a concrete floor would preserve the integrity of a noncombustible facility.

Under the requirements of this paragraph a permanent fuel storage facility must be provided with a competent floor made of concrete or an equivalent material. The term ''competent'' is used to make clear that a cracked concrete floor or a porous mine floor would not satisfy this requirement. A brattice-type lining or rubber membrane would not be considered equivalent because it could easily be torn during refueling of vehicles, and diesel fuel could leak through and accumulate underneath. This provision has been added to the final rule in direct response to commenters, many of whom testified at the Agency's public hearings on the proposal. MSHA believes that this provision constitutes a logical outgrowth of the proposal because of commenters' stated concerns in ensuring that spilled fuel will not saturate the mine floor and create a fire hazard.

The requirements of paragraph (b) of this section of the final rule apply to both permanent underground fuel storage facilities and temporary underground fuel storage areas. This paragraph requires that these storage facilities or areas be: equipped with a 240 pounds of rock dust and at least two fire extinguishers, or, in the alternative, with at least three fire extinguishers; be conspicuously marked; and be maintained to prevent the accumulation of water. These basic requirements address potential fire hazards in these facilities and ensure that mine personnel are aware of the presence and location of such facilities.

Paragraph (b)(1) requires that permanent fuel storage facilities and temporary fuel storage areas be equipped with at least 240 pounds of rock dust and provided with two portable multipurpose dry chemical type (ABC) fire extinguishers that are listed or approved by a nationally recognized independent testing laboratory and have a 10A:60B:C or higher rating. Both extinguishers must be easily accessible to personnel, and at least one must be located outside of the facility or area, upwind of the facility in intake air. Paragraph (b)(2) provides, as an alternative to the requirement of paragraph (b)(1), that three fire extinguishers may be provided.

The proposal would have required fixed and mobile fuel storage facilities to be equipped with at least two 20-pound multipurpose dry chemical type fire extinguishers, and would not have required that rock dust be provided. One commenter recommended that foam generating machines or fire extinguishers of 150 pounds or more be required. The final rule does not adopt the suggestion of this commenter, because MSHA considers it too hazardous to fight a diesel fire underground that cannot be extinguished in its incipient stages. The fire extinguishers and fire suppression equipment required by this section are intended to be used to extinguish small fires, such as could occur on equipment in the facility.

The final rule redefines the type of dry chemical extinguishers that are required, based on specifications recommended by the National Fire Protection Association for the particular hazard involved. The rating of the fire extinguishers has been adopted from NFPA 123 and is in accordance with NFPA 10–Standard for Portable Fire Extinguishers. Also, extinguishers must be listed or approved by a nationally recognized independent testing laboratory, which provides assurance that the extinguishers will perform effectively in the event of a fire emergency. The final rule requires that the fire extinguishers be located so that miners will have quick access to them in the event of a fire. To allow flexibility in complying with the requirements of this paragraph, the final rule addresses the location of only one fire extinguisher. The location of the other extinguisher should be determined based on mine conditions and the particular usage of the facility. The final rule specifies that the fire extinguisher be located upwind of the facility, which has been added to ensure that if a fire occurs miners will be able to reach the fire extinguisher without being exposed to the heat or smoke of the fire.

The final rule adds a requirement for 240 pounds of rock dust to be kept in the storage facility in response to comments concerning the effectiveness of rock dust in fighting diesel fuel fires and the ability of rock dust to contain spills. The requirement for 240 pounds of rock dust is consistent with § 75.1100–2(f), which requires 240 pounds of rock dust to be provided at permanent underground oil storage stations, and is included in the final rule as an added measure of fire protection in response to the concerns of commenters. However, paragraph (b)(2) allows an additional fire extinguisher to be substituted for the rock dust required under paragraph (b)(1), which is consistent with provisions in existing petitions for

modification for fire protection at electrical installations. The requirements of the final rule strike a balance between those commenters concerned about the need for additional fire protection provided by rock dust in locations where diesel fuel is stored, and those who were concerned that the storage of rock dust in those locations was inadvisable in mines that tended to be wet.

Paragraph (b)(3) adopts the requirement of the proposal that permanent diesel fuel storage facilities and temporary fuel storage areas be identified with conspicuous markings designating diesel fuel storage. The proposal would have required the facilities to be designated as ''combustible liquid storage,'' but MSHA has concluded that precise identification as areas of diesel fuel storage is more appropriate, and will ensure that mine personnel are aware of the locations where diesel fuel is stored underground.

Paragraph (b)(4) requires that fuel storage facilities or areas be maintained to prevent the accumulation of water. The proposal would have required that fixed and mobile underground storage facilities be located in an area as dry as practicable, a concept which several commenters considered to be vague and potentially difficult to comply with. This requirement has therefore been revised to require that permanent underground diesel fuel storage facilities and temporary fuel storage areas be maintained to prevent the accumulation of water. This provision recognizes that tanks or other components of the storage facility may corrode as a result of exposure to water. Additionally, accumulated water can increase the fire hazard present by a fuel spill, because diesel fuel will float on top of water and may be spread more easily throughout the storage facility. The requirement of this paragraph addresses these hazards.

Paragraph (c) adopts the proposed prohibition on welding or cutting, except as provided in paragraph (d) of this section, from being performed within 50 feet of a diesel fuel storage facility or area. This requirement is intended to minimize fire hazards and is consistent with National Fire Protection Association requirements (NFPA 123). No comments were received on this aspect of the proposal.

Paragraphs (d)(1) and (d)(2) adopt the requirements of the proposal and set forth specific precautions to be followed when welding, cutting, or soldering pipelines, tanks, or other containers that might have contained diesel fuel. MSHA received only a few comments on this aspect of the proposal, which is consistent with NFPA requirements. A review of MSHA's accident data reveals that a fatal accident occurred when the victim was welding a diesel fuel storage tank. The victim had drained the tank, which had been filled with water, and attempted to repair a small leak which remained in the tank. Vapors from the residual fuel were ignited by the heat of welding, and the tank exploded. The requirements of this paragraph are intended to address such hazards, and recognize that welding can be performed safely underground as long as appropriate safeguards are followed. Additionally, the large size of certain vessels used for the storage of diesel fuel underground would make it impractical to restrict welding of such containers to the surface. The precautions in paragraph (d)(1) include thoroughly purging and cleaning or inerting the pipelines, containers, or tanks before welding or cutting, with a vent or opening provided in the container or tank to release pressure before heat is provided. The final rule also prohibits diesel fuel from entering pipelines, tanks, or other containers that have been welded, soldered, brazed, or cut until the metal has cooled to ambient temperature. A slight change has been made in the language of this requirement to conform the references to the diesel fuel containers that are the subject of these requirements. The phrase ''pipelines, tanks, or other containers'' is used throughout. Additionally, the reference in proposed paragraph (d)(1) to containers or tanks that ''have contained combustible or flammable materials'' has been changed in the final rule to pipelines, tanks or other containers ''that have contained diesel fuel,'' to eliminate the inconsistency that existed between this provision and other language in this paragraph and to clarify the scope of these requirements.

One commenter recommended that a cleanup program be required for underground fuel storage facilities and areas. This recommendation has not been adopted in the final rule, because existing § 75.400–2 already requires mine operators to establish and maintain programs for regular cleanup of accumulations of coal and other combustibles. MSHA will require that underground diesel fuel storage facilities and areas be covered by the cleanup program under § 75.400–2, which will ensure that these locations are kept clear of any combustible materials.

Section 75.1904 Underground Diesel Fuel Tanks And Safety Cans

This section includes requirements for the design of diesel fuel tanks and safety cans and for emergency venting devices for diesel fuel tanks for venting vapors to protect against the buildup of pressure in the tank, which could lead to its rupture if the tank is exposed to fire. The requirements of this section are responsive to comments and are consistent with NFPA, Underwriters Laboratories, and American Petroleum Institute standards for storage tanks for combustible liquids. A number of commenters suggested restructuring and reorganizing the proposed design requirements for diesel fuel tanks, and the final rule is revised in response to these comments.

Paragraph (a) of this section of the final rule contains construction and location requirements for underground diesel fuel tanks in permanent underground fuel storage facilities and temporary underground fuel storage areas. These requirements are intended to guard against leakage of diesel fuel and to minimize fire hazards.

Paragraph (a)(1) requires that underground diesel fuel tanks have steel walls of a minimum 3/16-inch thickness or walls made of other metal of a thickness that provides equivalent strength. This specification has been added to the final rule to ensure that diesel fuel storage tanks are properly designed for their intended purpose, and in response to commenters who were concerned that diesel fuel tanks be durably constructed. MSHA explored alternatives for an objective measurement of durable construction. The requirement of this paragraph is consistent with prevailing industry standards, and is intended to serve as a minimum design standard for substantially constructed tanks. This requirement is derived from Department of Transportation (DOT) Spec. 51 Section 178–245–2(b), and is consistent with DOT requirements for over-the-road vehicles that transport diesel fuel. This specification is also recognized by the National Fire Protection Association in many of its fire protection standards as a design guideline for tanks used for storage of combustible liquids. Manufacturers of fuel transportation units currently produce diesel fuel storage tanks with 3/16-inch thick steel walls, and this specification will allow mine operators to buy diesel fuel tanks off-the-shelf.

Paragraph (a)(2) requires diesel fuel tanks to be protected from corrosion. The proposal would have required these tanks to be constructed of ''noncorrosive

material.'' The language of the final rule will allow mine operators the option of either using a tank that has been constructed of noncorrosive material, such as galvanized or stainless steel, or of protecting a tank from corrosion that has been constructed of an oxidizing material, such as common steel. Protection from corrosion can be achieved by applying a protective coating.

Paragraph (a)(3) requires diesel fuel tanks to be of seamless construction or fabricated with liquid tight welded seams. MSHA has added this requirement to the final rule in response to comments raising concerns about the durability of fuel tanks in use underground, to provide an objective measurement of substantial construction. Bolted and crimped joints are not allowed under the final rule because they are prone to leakage. The requirement of this paragraph is consistent with DOT Spec. 51 Section 178–245–2(b), and is intended to ensure that diesel fuel tanks are well constructed and designed not to leak.

Paragraph (a)(4) requires that diesel fuel tanks not leak, and has been added in the final rule in response to commenters' concerns that tanks not contribute to a fire. Under the final rule, all attachments to the tank, such as vents, caps, hoses, pumps, valves, and nozzles, must also be free from leaks. Many commenters were concerned with leakage hazards presented by the storage of diesel fuel underground. These commenters were particularly concerned about leakage in temporary diesel fuel storage areas. MSHA believes that the requirement of this paragraph, in conjunction with the other provisions in this final rule, will greatly minimize hazards associated with storage of diesel fuel underground.

Paragraph (a)(5) requires stationary tanks in permanent underground diesel fuel storage facilities to be placed on noncombustible supports so that tanks are at least 12 inches above the floor. Under the proposal such tanks would have been required to be supported by concrete, masonry, protected steel, or equivalent supports. Steel supports, except for steel saddles less than 12 inches from the floor, would have been required to be protected by materials having a fire resistance rating of not less than two hours. The proposal did not specify the minimum distance the tank must be from the floor. Commenters stated that positioning tanks at least 12 inches off the floor would allow for proper cleaning, rock dusting and quick detection of leaks. MSHA agrees with these comments and has revised the final rule accordingly. Additionally, the final rule provides that the tank supports must be made of noncombustible material, which is defined in § 75.1900 of the final rule, making unnecessary the reference in the proposal to ''concrete, masonry, protected steel, or equivalent supports''. The reference has therefore not been adopted in the final rule.

Paragraph (b)(1) requires diesel fuel tanks to be provided with devices for emergency venting that are designed to open at a pressure that does not exceed 2.5 pounds per square inch. Under this requirement, the venting devices must also meet minimum size requirements based on the capacity of the tank. The rule provides minimum vent device specifications for two ranges of tank sizes: tanks with a capacity of 500 gallons or less and tanks with a capacity of more than 500 gallons. The requirements of this section are incorporated in NFPA standards for portable tanks for transporting and storage of combustible liquids, as well as in American Petroleum Institute design standards. These vents are designed to activate at a pressure which is below the expected yield point of the tank and to provide the necessary volumetric flow rate to maintain safe internal pressure if the tank shell were to heat up as a fire develops. Opening of the device will allow the vapors to be safely vented and will prevent the tank from rupturing under this condition. Some commercially available emergency vents have been listed or approved by nationally recognized independent testing laboratories and can be expected to provide adequate pressure relief in a fire situation. The vent sizes required in the final rule were determined by design calculations outlined in National Fire Protection Association, Underwriters Laboratories, and American Petroleum Institute standards for a range of tank sizes typical for underground diesel fuel storage. These calculations take into account the probable maximum rate of heat transfer per unit area; the size of the tank and the percentage of the area likely to be exposed; the time required to bring the tank contents to a boil; the time required to heat unwet portions of the tank shell or roof to a temperature where the metal will lose strength; and the effect of drainage, insulation and the application of water in reducing the fire exposure and heat transfer. MSHA believes that specifying the minimum size of vent for two ranges of tank sizes is preferable to a requirement that would require the operator to design vents for a given size. The types of emergency vents required under this paragraph are commercially available and relatively inexpensive. The requirement of this paragraph respond to concerns of commenters regarding the hazards of fuel storage underground.

Paragraph (b)(2) requires tethered or self-closing caps for stationary tanks in permanent underground diesel fuel storage facilities, and self-closing caps for diesel fuel tanks on diesel fuel transportation units. The proposed rule would have required self-closing caps for all diesel fuel storage tanks, and did not include the alternative of a tethered cap for stationary tanks. One commenter suggested that self-closing caps are not needed on fixed tanks since they are unlikely to incur fuel spillage. The final rule permits the optional use of a tethered cap for stationary tanks, which adds flexibility and provides the same degree of protection as a self-closing cap.

Paragraphs (b)(3), (b)(4), (b)(5), and (b)(6) are unchanged from the proposal, with the exception of paragraph (b)(6) which has been revised to reflect commenters' concerns with respect to the location of shutoff valves. Paragraph (b)(3) addresses the size of vents, and will permit the free flow of fuel out of the tank without creating a vacuum in the tank that could damage its shell. Paragraph (b)(4) addresses requirements for liquid tight connections, and will minimize the risk of leaks and the resulting risk of fire. Paragraph (b)(4)(i) requires that liquid tight connections for all tank openings be identified by conspicuous markings that specify the function. Because this provision is performance-oriented and allows the mine operator to choose the manner in which markings identify connections, MSHA anticipates the burden time under the Paperwork Reduction Act of 1995 to be minimal.

Paragraph (b)(5) addresses requirements for vent pipes, and will minimize the possibility of fuel leaking from vent lines.

Paragraph (b)(6) is derived from proposed § 75.1906(c)(5) and requires that shutoff valves be located as close as practicable to the tank shell. The proposal would have required shutoff valves to be located within 1 inch of the tank shell. Because shutoff valves that extend for any distance from the fuel tank can be inadvertently damaged or broken off, making it impossible to shut off the flow of liquid from the fuel tank, the valves must be located close to the tank where they are protected from damage. However, one commenter was concerned that the proposal was too restrictive because it may not always be possible from a practical standpoint to locate the shutoff valve within 1 inch of

the tank shell. The final rule responds to this commenter's suggestion by allowing greater flexibility, and provides that the valve be located as close as practicable to the tank shell.

Paragraph (b)(7) adopts the requirement of the proposal for an automatic closing, heat-actuated valve on each withdrawal connection below the liquid level. The final rule does not adopt the proposed exception for connections used for emergency disposal, because this exception is not relevant to underground coal mines. The proposed rule required the installation of heat-actuated shutoff valves only on tanks in fixed storage facilities. The final rule extends this requirements to all diesel fuel tanks used underground, which would include tanks on diesel fuel transportation units. Automatic closing, heat-actuated valves shut the flow of fuel off when exposed to high temperatures. These valves prevent additional fuel from being discharged from the tank in the event of a fire. This requirement has been extended to tanks on transportation units, and is warranted in light of the scaling back of construction requirements for temporary fuel storage areas in the final rule in response to commenters' concerns that the requirements were impractical.

Paragraph (c) addresses tanks with openings for manual gauging, and requires that liquid tight, tethered or self-closing caps or covers be provided and be kept closed when not open for gauging. The alternative of tethered caps or covers has been added to the final rule for flexibility. MSHA believes the use of self-closing or tethered caps will provide necessary protection against overflow.

Paragraph (d) requires that surfaces of the tank and its associated components be protected against collision. This provision has been added to the final rule in response to commenters who were concerned about protecting the tanks from moving equipment. MSHA agrees that it is essential that diesel fuel storage tanks be protected from damage by collision with other equipment. Stationary tanks in permanent fuel storage facilities may need guards or barricades, depending upon their location, to prevent moving equipment from colliding with the tank.

Paragraph (e) sets forth requirements for leakage tests for tanks and their associated components, except that tanks and components connected directly to piping systems must be properly designed for the application. The final rule requires a leakage test at a pressure equal to the working pressure. The proposed rule would have required both a strength test and a leakage test, at a pressure equal to the static head, for diesel fuel storage tanks before the tanks were placed in service. Commenters recommended that tanks and their connections be tested at a pressure twice the working pressure.

The final rule does not require testing at twice the working pressure, in light of the detailed construction and design requirements for diesel fuel storage tanks in the final rule. The term ''static head'' in the proposed rule has been replaced with the term ''working pressure'' in the final rule. Although the meanings are the same in this context, the term ''working pressure'' is more widely used and more commonly understood in the mining industry. Compliance with the requirement of this paragraph will provide protection from hazards associated with leakage of diesel fuel underground. Under the final rule, mine operators are expected to verify that no leaks exist after installing the tank underground and connecting all of the tank's associated components before placing the tank in service. All components must be rated for the working pressures in the system. Both the static head and the maximum pump pressure, if applicable, must be considered when designing and selecting tanks and associated components connected to a piping system. For tanks connected to a piping system from the surface, the static head pressure could easily exceed several hundred pounds per square inch (psi), either during normal operation or because of a fault in the system. For these systems, MSHA advises mine operators to plan for a worst-case (highest pressure) scenario and select a tank and tank components that are designed for use at this pressure.

MSHA has concluded that the strength test for tanks that was included as part of the proposal is unnecessary, given the other specifications for tanks. This proposed requirement has therefore not been included in the final rule.

The proposal would have imposed additional requirements on tanks in underground diesel storage facilities that were not located in ''dry areas.'' Such tanks would have been required under the proposal to be placed on noncombustible supports so that the tanks were at least 6 inches above water or wet bottom, and such tanks would also have been required to be constructed of noncorrosive material. Commenters stated that the concept of ''dry areas'' was ambiguous and should not be adopted. MSHA agrees with these comments, and this aspect of the proposal has therefore not been included in the final rule. However, under the final rule, stationary tanks in permanent underground storage facilities must be placed on noncombustible supports at least 12 inches above the floor to allow for proper cleaning, rock dusting and quick detection of leaks. Tanks will also be protected by this requirement from wet floors. Further, the final rule requires all diesel fuel storage tanks to be protected from corrosion. These requirements will ensure that tanks are sufficiently shielded from water damage.

Paragraph (f) establishes design and size requirements for safety cans. These requirements have been added to the final rule to ensure that small amounts of diesel fuel can be transported and stored in a safe manner. Although the proposed rule contemplated the use of safety cans to transport small amounts of diesel fuel underground, the proposal would not have set design requirements for safety cans. Commenters were concerned that widespread and uncontrolled use of safety cans underground would result in fuel spills and accumulations on mine equipment and mine floors. The provisions of this paragraph are intended to address commenters' concerns about the hazards presented by safety cans used to store and transport diesel fuel in the underground mine environment.

The final rule establishes specific design requirements for safety cans. As indicated in the discussion of § 75.1900, the term ''safety can'' is defined in the final rule as a metal container intended for storage, transport or dispensing of diesel fuel with a nominal capacity of no more than 5 gallons, listed or approved by a nationally recognized independent testing laboratory. Paragraph (f)(1) of this section reiterates the 5-gallon capacity limitation, and paragraph (f)(2) requires that safety cans be equipped with a flexible or rigid tubular nozzle attached to a valved spout. Paragraph (f)(3) requires that safety cans be provided with a vent valve designed to open and close simultaneously and automatically with the opening and closing of the pouring valve. Finally, paragraph (f)(4) requires that safety cans be designed so that they will safely relieve internal pressure when exposed to fire. These requirements will reduce the likelihood of diesel fuel spills and afford appropriate protection for miners, in response to commenters who were concerned about the use of safety cans to store and transport diesel fuel.

Section 75.1905 Dispensing of Diesel Fuel

This section addresses the dispensing of diesel fuel, and has been revised from the proposal to clarify the various ways that diesel fuel may be safely dispensed. Paragraph (a) provides that diesel-powered equipment may be refueled only from safety cans, from tanks on diesel fuel transportation units, or from stationary tanks. These requirements are intended to control the circumstances under which diesel fuel is dispensed underground, minimizing the opportunities for spills or leakage, and in response to commenters who expressed concern about fuel spillage underground.

Paragraph (b) contains requirements for the dispensing of diesel fuel from tanks, except for the dispensing of fuel from safety cans. Design specifications for safety cans are included in § 75.1904(f) of the final rule, which requires nozzles, spouts, and vent valves on safety cans.

The requirements of paragraph (b)(1) apply when gravity feed is used as a means of dispensing diesel fuel. Although in developing the proposed rule MSHA contemplated that gravity feed would be used as a method for dispensing fuel, the proposal did not specifically refer to it. Some commenters questioned whether this omission should be interpreted as a prohibition of gravity feed fuel dispensing. In response to these comments, MSHA has clarified that gravity feed is a permissible method of dispensing fuel. However, because gravity feed presents the same potential as a powered pump for a loss of fuel from an unattended hose, the final rule prohibits a latch-open device when gravity feed is the method of dispensing.

Paragraph (b)(2) is identical to the proposal and requires that a manual pump used to dispense diesel fuel have a hose equipped with a nozzle containing a self-closing valve. No comments were received on this aspect of the proposal, and it has been adopted unchanged.

Paragraphs (b)(3) (i) through (iii) require that, when a powered pump is used to dispense fuel, it be equipped with an accessible emergency shutoff switch for each nozzle, and that the hose be equipped with a self-closing valve without a latch-open device, and with an anti-siphoning device. These requirements have been adopted, with some minor changes, from the proposal. Specifically, the final rule clarifies that an accessible emergency shutoff switch be provided for ''each nozzle'', and adds a requirement for an anti-siphoning device. These modifications recognize that fuel piping systems may be installed underground that do not transport fuel from the surface, but from one location to another in the mine itself. These additional requirements are intended to prevent the leakage or pumping of the contents of a tank into the mine in the event of a broken or leaking pipe or hose. An accessible emergency shutoff switch is required for each nozzle under the final rule to permit quick action by mine personnel in the case of a leaking pipe or hose or in the event of fire during refueling. An anti-siphoning device prevents the inadvertent siphoning of fuel from a tank connected to the piping system, and is responsive to commenters' concerns regarding the hazards of fuel leaks and spills underground.

Commenters recommended that an inline fuse be required as near as possible to the pump's power source to deenergize the electrical system in the event of an electrical short circuit. This comment has not been adopted in the final rule, because the circuit protection specified in existing § 75.518 is sufficient to prevent or detect a short circuit. In addition, other existing electrical safety requirements in part 75 apply to electrical components associated with diesel fuel handling and storage, and provide adequate protection from electrical hazards.

Paragraph (c) prohibits the use of compressed gas in dispensing diesel fuel. This prohibition is identical to what was proposed and received no comments. The use of compressed gas to dispense diesel fuel would require not only a special tank but also an emergency venting system for pressurized tanks, and would still present a hazard. If a leak developed in the pressurized tank or its associated piping, relatively large amount of fuel could be spilled onto the mine floor, creating a serious fire hazard. This prohibition has therefore been retained in the final rule.

Paragraph (d), like the proposal, prohibits diesel fuel from being dispensed to the fuel tank of diesel-powered equipment while the equipment engine is running. This prohibition is derived from MSHA's review of Canadian fire accident data, which reveals that 10 fires occurred during refueling. Failure to shut off the engine may have contributed to these fires. This prohibition is also consistent with § 75.1916(d) of the final rule, which forbids unnecessary engine idling, and reduces exposure of miners to exhaust emissions.

Several commenters recommended that permissible diesel equipment be excluded from this prohibition because it is designed to be explosion-proof. These commenters also stated that shutting down the equipment should be avoided because of the difficulty in restarting it, and that in some cases a trained mechanic would be needed to restart the engine.

MSHA does not agree that permissible equipment should be excluded from this requirement. Although permissible diesel equipment is equipped with engine surface temperature controls that would prevent the ignition of diesel fuel if it is spilled on the equipment, air quality considerations support the adoption of this requirement for permissible as well as nonpermissible equipment. Not shutting down a machine engine during refueling serves no purpose other than convenience, and the diesel exhaust produced contributes unnecessarily to contaminant levels. The fact that engines may be difficult to restart does not justify exempting permissible equipment from this requirement. Equipment that is difficult to restart is in need of service or repair. The final rule therefore does not exempt permissible equipment from the prohibition against refueling of diesel equipment while the equipment engine is running.

Paragraph (e), which requires that powered pumps be shut off when fuel is not being dispensed, has been added to the final rule to address concerns about loss of fuel as a result of broken or leaking pipes. This requirement is intended to minimize the likelihood of fuel spills in the underground mine environment.

Section 75.1905–1 Diesel Fuel Piping Systems

Section 75.1905–1 has been added to the final rule to address requirements for diesel fuel piping systems. The requirements in the proposal governing fuel piping systems were included in the same section as proposed requirements for fuel transfer. MSHA has concluded that dispensing requirements and design and construction requirements for piping systems are sufficiently unique that they are more appropriately addressed in a separate standard.

Underground fuel piping systems can be very complex and may require specialized expertise for their design and installation. Mine operators should ensure that an engineering evaluation, including a fault analysis, is performed in developing a fuel piping system.

One commenter recommended that piping of diesel fuel should be allowed only in shaft mines, from the surface vertically to permanent underground

storage areas, and that the piping should be contained in its own borehole to isolate it from ignition sources. Safety considerations do not warrant restricting fuel piping systems to shaft mines. MSHA and industry experience, including an analysis of accident reports, does not reveal any increased hazard with the use of piping systems in slope mines. In the final rule, MSHA has removed the reference to vertical pipelines to clarify that this section applies to all mines.

Paragraph (a) of this section of the final rule adopts the proposed requirement that diesel fuel piping systems from the surface to be designed and operated as dry systems, unless an automatic shutdown is incorporated that prevents accidental loss or spillage of fuel and that activates an alarm system. The phrase ''from the surface'' has been added to the final rule to clarify that only piping systems from the surface are governed by the requirements of this paragraph. MSHA is aware that some mines have installed horizontal piping systems that do not originate at the surface. Because these horizontal systems typically cannot be operated as dry systems, the rule specifies that these systems would not be affected by this requirement. No location is specified for the alarm in the final rule, to allow mine operators flexibility in determining where the alarm will be most effective in alerting mine personnel.

Compliance with the requirement of this paragraph mandates a well designed piping system, and may require a double wall system. Except for the comment suggesting that piping of diesel fuel underground be limited to shaft mines, MSHA received no other comments on this provision, and the proposed requirement has been adopted in the final rule without change.

Paragraphs (b)(1) through (b)(4) address requirements for piping, valves, and fittings. These requirements are unchanged from the proposal, and constitute generally accepted design specifications. This standard requires that all piping, valves, and fittings be: (1) Capable of withstanding working pressures and stresses; (2) capable of withstanding four times the static pressure; (3) compatible with diesel fuel; and (4) maintained in a manner which prevents leakage.

Paragraph (c) requires pipelines to have manual shutoff valves installed at the surface filling point, and at the underground discharge point. This requirement is the same as the proposal, except that the proposal used the term ''vertical'' to describe pipelines. For the reasons discussed in the introduction to this section, the term ''vertical'' has been eliminated to clarify that this section applies to all underground coal mines.

Paragraphs (d) and (e), like the proposal, include requirements for shutoff valves on fuel lines. Paragraph (d) provides that if fuel lines are not buried in the ground, shutoff valves must be located every 300 feet. Paragraph (e) requires that shutoff valves be installed at each branch line where the branch line joins the main line. One commenter recommended that automatic shutoff valves be required in these two situations, stating that they provide for minimal loss of fuel and maximum safety in the case of a pipeline rupture or leak. MSHA does not believe that automatic shutoff valves are necessary when the additional benefits are balanced with other provisions in this final rule. The commenter's suggestion has therefore not been adopted in the final rule.

Paragraph (f) is a new provision in the final rule and requires that an automatic means be provided to prevent unintentional transfer of fuel from the surface into the permanent underground diesel fuel storage facility. This requirement has been added to address the concerns of some commenters that were prompted by a specific diesel fuel spill caused by malfunctioning components in a diesel fuel piping system. Additionally, many commenters were generally concerned about possible fire and other hazards that could result from diesel fuel spills and leaks, particularly when piping systems are used. This paragraph responds to those comments by requiring a fail-safe piping system, ensuring that necessary protection is provided to miners.

Paragraph (g) provides that diesel fuel piping systems from the surface can only be used to transport fuel directly to stationary tanks or diesel fuel transportation units in a permanent underground diesel fuel storage facility. This requirement has been renumbered and has been revised from the proposal to respond to commenters who recommended strict control of the use of safety cans and stated that dispensing fuel from a piping system directly into diesel equipment fuel tanks would create a fire hazard. This paragraph is intended to prohibit filling safety cans and equipment fuel tanks directly from a piping system and further minimize hazards associated with fuel spills.

Under this paragraph a fuel piping system from the surface may terminate underground only in a permanent fuel storage facility, which must be equipped with features such as a fire suppression system and a means of containing a fuel spill. Because temporary fuel storage areas are not required to have these features, they would not provide adequate fire protection for a situation where a significant amount of fuel is lost in a spill from a piping system.

Paragraph (h), like the proposal, requires that when boreholes are used the diesel fuel piping system cannot be located in a borehole with electric power cables. This will minimize the likelihood of fire by diesel fuel coming into contact with potential ignition sources.

Paragraph (i) requires that diesel fuel piping systems located in entries not be located on the same side of the entry as electric cables or power lines. It also requires that guarding be provided when piping systems cross electric cables or power lines. The final rule has been modified from the proposal to acknowledge that, in some cases, a pipeline must cross over power lines, depending upon the mine's layout. The standard addresses any hazards presented by the intersection of pipelines and electric cables or power lines by requiring that guarding be provided.

Paragraph (j) requires that piping systems be protected to prevent physical damage. Commenters supported this provision, and it is unchanged from the proposal.

Section 75.1906 Transport of Diesel Fuel

This section of the final rule has been retitled and reorganized to reflect MSHA's approach to diesel fuel storage and handling in this final rule. The word ''containers'' is removed from the title to reflect that only two types of vessels are allowed to transport and dispense diesel fuel—safety cans and tanks. This section of the final rule is responsive to commenters who: expressed concerns about the wide and uncontrolled use of safety cans in underground coal mines; recommended limited section storage of diesel fuel; stated that fire suppression systems were not needed on the tank used to transport fuel; and noted the need for clarification of the requirement for portable fire extinguishers on diesel fuel transportation units.

Several commenters stated that the proposed rule was vague and confusing. Their comments were directed to the use of the terms ''containers,'' ''safety cans,'' ''tanks,'' and ''fuel transportation units.'' As indicated in the preamble discussion for § 75.1900, MSHA has included definitions in the final rule for the terms ''safety cans,'' ''diesel fuel tank,'' and ''diesel fuel transportation unit'' to provide additional clarification

for the fuel handling and storage requirements in the final rule. The term ''container'' has not been defined because it has been eliminated from the final rule.

Several commenters recommended that the use of small containers and cans be restricted because they are prone to leak when transported or used to dispense fuel. In support of their recommendation, these commenters cited instances of mine floors being saturated with fuel. Other commenters urged that safety cans be allowed for transport of small quantities of diesel fuel, and stated that prohibiting their use would be unwarranted. As stated earlier in the discussion for this section, the final rule has been revised to require that safety cans be listed or approved by a nationally recognized independent testing laboratory. This aspect of the final rule will provide miners with protection against leakage and spillage during dispensing operations, while recognizing the practical need to transport small quantities of diesel fuel.

Paragraph (a) of this section of the final rule requires diesel fuel to be transported only by diesel fuel transportation units or in safety cans. This requirement is intended to ensure that diesel fuel is transported only in vessels designed for that purpose. The proposal would have required diesel fuel to be transported in specially designed containers. A commenter recommended substituting the term ''combustible liquid'' in place of the term ''diesel fuel'', stating that there are Department of Transportation specifications for containers that transport combustible liquids. The final rule responds to commenters by limiting the transport of diesel fuel to safety cans, which must be listed or approved by a nationally recognized independent testing laboratory, or by diesel fuel transportation units, which must be equipped with a tank designed for the transport of diesel fuel.

MSHA recognizes that safety can use must be carefully controlled. Paragraph (b) of this section of the final rule allows only one safety can to be transported on a vehicle at any time, and the can must be protected from damage during transport. All other safety cans must be stored in permanent underground fuel storage facilities. This provision is revised from the proposal to be responsive to commenters who cited problems with misuse of small cans and recommended that they be strictly controlled. Commenters further stated that in some mines there was no designated area for storage of safety cans. The requirements that have been added to the final rule are intended to ensure safe transport of safety cans. The final rule does not require that single safety cans, which are secured and protected on a vehicle, be removed for storage in permanent facilities when the vehicle is left unattended. This aspect of the final rule will allow for emergency refueling, while at the same time provide a degree of control over the use of safety cans.

Paragraphs (c) and (d) require that leaking safety cans be promptly removed from the mine, and that safety cans and tanks on diesel fuel transportation units be conspicuously marked. These marking requirements are consistent with marking requirements for permanent fuel storage facilities and temporary fuel storage areas in § 75.1903(b)(3) of the final rule. The inclusion of marking requirements for safety cans and tanks in the final rule is responsive to several commenters who suggested that signs should be placed on mobile equipment identifying tanks and cans used for diesel fuel storage. This is also a prudent fire protection practice.

Paragraphs (e) and (f) establish requirements for the transportation of tanks on fuel transportation units. As mentioned earlier, the final rule does not use the term ''container''. Paragraph (e) provides that diesel fuel transportation units must not transport more than 500 gallons of diesel fuel at one time. Paragraph (f) requires tanks on diesel fuel transportation units to be permanently fixed to the units and have a total capacity of no greater than 500 gallons. Under the proposal, containers used for the transport of diesel fuel could not exceed a capacity of 500 gallons, and would have been required to be permanently fixed to the transportation unit. One commenter recommended that the maximum tank capacity be limited to 250 gallons, reasoning that less fuel would reduce the fire hazard. The interrelated precautions of the final rule are designed to protect against a fire involving a diesel fuel transportation unit. Reducing the unit's fuel capacity to 250 gallons would not add significantly to the protection against fire, and would increase the frequency with which the unit would need to be refilled. However, paragraph (e) is intended to limit the amount of fuel transported by a single trip, either on rails or rubber tires, to 500 gallons. Paragraph (f) will ensure that the fuel tank is not removed from the vehicle for transport separately, thereby exposing the tank to possible damage, and also offers some protection for the tank from the vehicle frame.

Paragraph (g) requires non-self-propelled diesel fuel transportation units equipped with electric components for dispensing fuel that are connected to a source of electrical power be provided with a fire suppression device that meets the requirements of existing §§ 75.1107–3 through 75.1107–6, §§ 75.1107–8, and § 75.1107–16. The proposed requirement would have required a fire suppression system meeting the requirements of proposed § 75.1911 on all diesel fuel transportation units, not only on those with electrical components.

Commenters were opposed to a requirement for fire suppression systems on all diesel fuel transportation units, stating that a trailer-mounted fuel tank did not need a fire suppression system since it had no ignition source, and should not be treated any differently than tanks transporting other combustible materials. These commenters believed that the fire extinguishers required under the proposal would provide adequate fire protection in temporary fuel storage areas.

MSHA agrees with commenters that fuel tanks alone, without an ignition source, do not present a significant fire hazard. However, fire protection for fuel tanks must be provided when a potential ignition source exists. An ignition source is present on the diesel fuel transportation unit when electrical power is provided to the dispensing pump on the unit from either an electric-powered machine or the mine electrical system. The final rule therefore requires fire protection for non-self-propelled diesel fuel transportation units with electrical components for dispensing fuel that are connected to a source of electrical power. Diesel fuel transportation units with electrical devices other than those used for dispensing fuel, such as lights, do not present a significant fire hazard and do not need to be protected by a fire suppression system. This fire suppression device requirement would also apply when the transportation unit's dispensing pump is powered by its own batteries or an off-board generator.

The final rule requires a fire suppression device meeting the requirements of existing § 75.1107, instead of § 75.1911 under the proposal, because the fire protection provided by § 75.1107 is suitable for electrical installations, and therefore appropriate for electrical components of fuel transportation units. A fire suppression system under § 75.1911 is designed to protect diesel-powered equipment, and,

unlike existing § 75.1107, does not require that the mine electric power supply to the fuel transportation unit be shut off when the fire suppression system is actuated, an important safety feature that prevents reignition of the fire.

Paragraph (h) requires diesel fuel transportation units and vehicles transporting safety cans to have at least two multipurpose, dry chemical type (ABC) fire extinguishers. The fire extinguishers must be listed or approved by a nationally recognized independent testing laboratory, and have a 10A:60B:C or higher rating. There must be at least one fire extinguisher located on each side of the vehicle. The proposal would have required that fire extinguishers be provided on each end of a fuel transportation unit when diesel fuel was transported in containers other than safety cans. Locating fire extinguishers on the side is consistent with the requirements of § 75.1911(e) of the final rule for the location of fire suppression system actuators. The type and size of extinguisher are the same as required by § 75.1903(b)(1) and (b)(2) for permanent underground diesel fuel storage facilities and temporary underground diesel fuel storage areas.

Paragraph (i) requires that diesel fuel transportation units be parked in permanent underground diesel fuel storage facilities or temporary underground fuel storage areas when not in use. Under the proposal, ''unattended'' diesel fuel transportation units would have been required to be parked only in fixed or mobile fuel storage facilities. Some commenters objected to this requirement, and urged MSHA to provide a more workable rule that would allow transportation units to be parked, consistent with the Advisory Committee's recommendation that MSHA establish requirements for the temporary parking of diesel transportation vehicles. Some commenters also stated that ''unattended'' was an ambiguous term.

The term ''unattended'' has been eliminated from the final rule. Instead, the final rule provides that diesel fuel transportation units that are ''not in use'' must be parked either in permanent storage facilities or temporary storage areas. The phrase ''not in use'' means that the unit is not being trammed or used to dispense fuel or lubricants or waiting to refuel another piece of equipment. It does not mean that the unit operator must be within 500 feet or within the line of sight of the fuel transportation unit, as long as the operator is performing an activity associated with the operation of the unit. This may occur, for example, while the operator is locating the next unit of equipment to be refueled. This requirement is intended to control the locations of diesel fuel transportation units to minimize fire hazards associated with their use.

Paragraph (j), like the proposal, applies the requirements of existing § 75.1003–2 when the distance between a diesel fuel transportation unit and an energized trolley wire at any location is less than 12 inches. Section 75.1003–2 sets forth specific precautions to be followed when off-track equipment is being moved in areas where energized trolley wires are present. MSHA received no comments on this aspect of the proposal and it has been adopted into the final rule unchanged. This requirement is intended to minimize the risk of ignition and fire when a diesel fuel transportation unit is in close proximity to a bare energized trolley wire. The sparks and heat from an electrical short circuit could ignite residual fuel on the transportation unit and fire may then spread to the larger volume of fuel stored on the transportation unit.

Paragraph (k) prohibits the transport of diesel fuel on or with mantrips, or on conveyor belts. This requirement has been revised from the proposal, which would have prohibited transport of diesel fuel on conveyor belts, to include within the prohibition the transport of diesel fuel on mantrips, in response to several commenters who expressed concern about transportation of diesel fuel on personnel carriers because of the inherent hazards associated with that practice. This requirement applies to equipment being used as personnel carriers, but does not apply to such equipment when it is used for purposes other than transporting miners in the mine. This requirement also does not apply to diesel fuel contained in the fuel tank of a diesel-powered personnel carrier.

Paragraph (l) requires that, as of 12 months after the publication date of the final rule, diesel fuel must be stored and handled in accordance with the requirements of §§ 75.1902 through 75.1906 of this part. Twelve months will provide sufficient time for mine operators to make any necessary changes to their fuel handling, transportation, and storage practices underground, such as fuel tank retrofits or construction of fuel storage facilities. The requirements of § 75.1903 (c) and (d) take effect sooner, because they address safe welding practices in or near diesel fuel storage areas, and mine operators should not need any additional time to come into compliance with these provisions.

Section 75.1907 Diesel-Powered Equipment Intended For Use In Underground Coal Mines.

This section establishes a schedule for compliance with the final rule's equipment-related requirements, including requirements for approved engines and power packages, fire suppression systems, and safety-related requirements for nonpermissible equipment in §§ 75.1909 and 75.1910. The concept of a time schedule to allow for conversion or replacement of diesel-powered equipment currently in use to comply with the new requirements of the final rule was recommended by the Diesel Advisory Committee. The Committee also recommended that equipment newly introduced underground after a fixed date meet the new requirements.

Under the compliance schedule of this section, 30 days after the rule's publication date all diesel-powered equipment used where permissible electric equipment is required must be approved under part 36. This section also establishes a compliance schedule for Part 36-approved equipment, to comply with certain surface temperature limits within 6 months, and be provided with a fire suppression system and brakes that meet certain standards within 36 months of the rule's publication. Part 36-approved equipment is also required to have a particulate index and a dilution air quantity determined under subpart E of part 7 within 12 months of the rule's publication date. Permissible diesel-powered equipment that is manufactured 3 years after the date of publication of the final rule or later and used in underground coal mines must incorporate a power package approved under subpart F of part 7 of the final rule. This section of the final rule also requires nonpermissible diesel-powered equipment, with the exception of the special category of ambulances and firefighting equipment under § 75.1908(d), to be equipped with the machine safety features set forth in §§ 75.1909 and 75.1910 within 36 months of the publication date of the final rule.

The overall approach taken in the final rule for equipment safety features is different from that of the proposal, in response to commenters and for reasons explained in detail in the preamble for parts 7 and 36. The proposed rule would have required approval of fully assembled permissible equipment under subpart H of part 7, and approval of fully assembled nonpermissible

equipment under subpart I of part 7. A limited class of light-duty nonpermissible equipment would have been established that did not require fully assembled machine approval, but which would have been equipped with specific machine safety features set forth as mandatory standards in proposed § 75.1909. Under proposed § 75.1907, specific deadlines, up to 60 months after the rule's effective date, would have been set for compliance with the equipment-related requirements of the final rule for both permissible and nonpermissible equipment, including limited class and stationary unattended equipment. Additionally, the proposal would have allowed a mine operator to apply for MSHA approval for continued use of diesel-powered locomotives without required subpart F or G power packages. MSHA would have been authorized to grant such approval if approved power packages suitable for specific mine conditions and locomotive design were not available, recognizing that the current state of technology might make compliance difficult or impossible.

The proposed rule took the approach of phasing in the different equipment-related requirements, depending on how long MSHA determined mine operators and manufacturers would need to obtain the necessary equipment or make the necessary retrofits, including time needed to obtain MSHA approval for the appropriate machine components. Specifically, the proposed rule would have allowed a longer period of time for equipment to be provided with approved engines and power packages than it would have allowed for other equipment-related requirements, for such features as brakes, fuel systems, and electrical components. Different time frames would have been allowed under the proposal to take into account the time needed for the MSHA approval process as well as the technical difficulties associated with retrofitting equipment with approved power packages and engines.

As discussed in the preamble to part 7 of the final rule, the final rule does not adopt the approach of fully assembled machine approval under subparts H and I of part 7 contemplated by the proposal and addressed in the concurrent advance notice of proposed rulemaking. Instead, part 36 has been expanded to specifically provide for approval of diesel-powered equipment used in areas of underground coal mines where permissible electric equipment is required. Fully assembled machine approval is not required under the final rule for any category of nonpermissible equipment. The compliance time frames of this section of the final rule reflect this change in approach.

The time frames in this section are based on an estimation of the useful life of existing diesel-powered equipment, the reasonable time needed to convert or retrofit existing equipment, and the commercial availability of suitable replacement equipment. The time frames in this section are intended to provide mine operators with a reasonable period of time to make determinations of the expected remaining useful life of diesel-powered machines in use in their mines and the cost of necessary machine modifications, and to compare this information with the replacement cost of equipment that complies with the requirements of the final rule.

One commenter rebuilt a diesel-powered truck to convert it to a personnel carrier that met the equipment safety requirements of the proposed rule for self-propelled limited class nonpermissible equipment, and submitted a written summary documenting the conversion into the rulemaking record. This information generally demonstrated that compliance would be facilitated if equipment-related requirements were phased in by equipment type, rather than phasing in specific requirements across all equipment types. In short, once an equipment rebuild is initiated, it is easier to perform all machine feature modifications at the same time.

One commenter asserted generally that mine operators and equipment manufacturers could bring diesel-powered equipment into compliance with the requirements of the final rule within 12 months. Although MSHA agrees, and the final rule reflects, that some requirements can be met within a year, compliance with other requirements, will reasonably involve more time.

As explained in greater detail elsewhere in the preamble, the final rule requires specific safety features on both permissible and nonpermissible diesel-powered equipment. These requirements apply to nonpermissible diesel-powered equipment in §§ 75.1909 and 75.1910, and will be applied to permissible diesel-powered equipment during the MSHA approval process under part 36.

The final rule does not require nonpermissible equipment to be provided with power packages, which would have been required under the proposal. Neither does it require fully assembled machine approval for nonpermissible equipment. Power packages would have provided this equipment with, among other things, surface temperature controls for the equipment. As discussed elsewhere in the preamble, commenters were divided on this issue. Some commenters believed not only that temperature controls were necessary to adequately address the fire hazards presented by diesel-powered equipment underground, but also recommended that all diesel-powered equipment be approved under part 36 as permissible, and provided with the explosion-proof features required on such equipment. Other commenters strenuously opposed a requirement for approved power packages on nonpermissible equipment, stating that surface temperature controls were not needed on equipment operated outby the face, and that fire protection features, such as fire suppression systems, in conjunction with other machine safety features would provide an appropriate margin of safety. These commenters stated that a power package requirement for nonpermissible equipment would have the effect of eliminating many useful pieces of equipment from mines that could not be retrofitted with power packages or would not be manufactured with them.

The final rule does not require approved power packages on outby equipment, except when the equipment discharges its exhaust directly into a return air course, as provided under § 75.1909. Proposed subpart G, which would have established an approval program for power packages for nonpermissible equipment, has not been adopted in the final rule. Instead, nonpermissible equipment is required under § 75.1909(a)(10) to be provided with a means to prevent the spray from ruptured hydraulic or lubricating oil lines from being ignited by contact with engine exhaust system component surfaces. This requirement recognizes that the hazards of high surface temperatures on diesel-powered equipment can be controlled in a number of ways in addition to the methods contemplated under proposed subpart G. MSHA has concluded that the requirement of paragraph (a)(10), along with the other safety features required for control of fuel sources on diesel-powered equipment, provides effective fire prevention on nonpermissible diesel-powered equipment. The approach of the final rule allows mine operators and manufacturers the flexibility to improve existing methods and to develop new methods of meeting the performance goals of the final rule requirements.

Paragraph (a) of this section of the final rule adopts the proposed requirement that within 30 days of the date of publication of the final rule, all

diesel-powered equipment used where permissible electrical equipment is required be approved under part 36. Part 36 approval ensures that the equipment is explosion-proof, and that equipment used in areas of the mine where methane is likely to accumulate and where there may be combustible quantities of coal dust and other materials will not cause a fire or an explosion. All underground coal mines using diesel equipment already have the approved equipment necessary to comply with this requirement, in most cases because the mine's ventilation plan specifically requires it. This requirement therefore goes into effect 30 days after publication of the final rule, providing necessary protections for miners working underground.

Paragraph (b) establishes a time schedule under which equipment approved under part 36 is required to be provided with additional safety features. Paragraph (b)(1) requires the equipment to be provided with a safety component system that limits surface temperatures to those specified in subpart F of part 7. This requirement is essentially identical to that of the proposal, which would have required that part 36-approved equipment be provided with a power package that limits surface temperatures to those specified in subpart F. In the final rule, the equipment is required to have a ''safety component system'' that limits the surface temperatures rather than a ''power package'' specified under the proposal. Existing permissible equipment has been approved under the current version of part 36, which uses the term ''safety component system'' to refer to those devices added to the engine to control surface temperatures of the exhaust system. The term ''power package'' used in the final rule includes those devices, which, with the engine, comprises the ''power package.'' Power packages are approved under subpart F of part 7 of the final rule. As discussed elsewhere in this preamble, part 36 has been specifically revised to provide for approval of diesel-powered machines used in underground coal mines. Part 36 now references subparts E and F of part 7 of the final rule, and requires equipment approved under part 36 for use in coal mines to be equipped with a power package approved under subpart F. Subpart F limits the maximum surface temperature to less than 302° F (150° C). Until promulgation of this final rule, the maximum surface temperature of the engine and exhaust system components under part 36 was 400° F (204° C). To date, only one engine and safety component system used in part 36-approved equipment has a surface temperature above 302° F, and the equipment on which the system is installed is not used in coal mines. Consequently, compliance with this requirement within six months of the publication of the final rule should present no compliance difficulties for mine operators or manufacturers. This requirement will ensure that permissible equipment in underground coal mines will have surface temperatures below 302° F, minimizing the chance that combustibles such as diesel fuel, float coal dust, and hydraulic fluid will be ignited by high surface temperatures.

Paragraph (b)(2) requires that, as of 36 months after the final rule is published, equipment approved under part 36 be provided with an automatic or manual fire suppression system that meets the requirements of § 75.1911, and be provided with a portable fire extinguisher. A fire suppression system is required on permissible equipment in addition to surface temperature controls to address fire hazards created by other machine system malfunctions. The fire suppression system on permissible equipment may be either manual or automatic. Under the proposal, part 36-approved equipment would have been required to have a fire suppression system that met the requirements of § 75.1911. The requirements of proposed § 75.1911 provided only for automatic fire suppressions systems. For reasons explained in greater detail in the preamble discussion to § 75.1911, automatic fire suppression is not required on permissible diesel-powered equipment. This is because all equipment approved under part 36 is provided with surface temperature controls, which reduce the risk of fire. The final rule includes the additional requirement that the equipment be provided with at least one portable multipurpose dry chemical type ABC fire extinguisher having a 10A:60B:C rating or higher. The fire extinguisher must be located within easy reach of the equipment operator and be protected from damage by collision. This requirement has been added in response to the recommendation of a commenter. MSHA has concluded that requiring equipment to be provided with a portable fire extinguisher is a good fire prevention practice, and this recommendation has therefore been adopted in the final rule, superseding the requirement in part 36 for a fire extinguisher with a much lower firefighting rating. This requirement is consistent with the fire extinguisher requirements for nonpermissible equipment in the final rule.

MSHA had proposed a 6-month compliance deadline for installation of fire suppression systems on part 36-approved equipment, but has concluded that a 36-month time frame is needed for mine operators to obtain MSHA approval of field modifications on approved equipment, and for equipment manufacturers to process approval applications to permit installation of fire suppression systems on permissible equipment. The Agency intends to promptly process approval applications for modification of machines to aid compliance with this requirement.

Paragraph (b)(3) has been added to the final rule to require that, as of 36 months after the publication date of the final rule, equipment approved under part 36 be provided with brake systems that meet the requirements of § 75.1909(b)(7), (b)(8), (b)(9), (c), (d), and (e). These brake requirements have been added to ensure that permissible equipment meets at least the same braking requirements as nonpermissible equipment under the final rule. All existing part 36 equipment is already equipped with service brake systems that meet the requirements of § 75.1909(b)(8), (b)(9), and (d). The requirements of § 75.1909(c) have been developed from requirements for automatic emergency parking brakes on electric equipment in § 75.523–3. A number of commenters supported the application of these requirements to diesel-powered equipment, and they have been applied to permissible equipment under the final rule. Some existing part 36-approved equipment will require minor modifications to comply with the requirements of § 75.1909(c). Section 75.1909(b)(7) essentially requires independent service brake systems for the front and rear wheels of vehicles. This is a well-recognized safety feature that is warranted for part 36-approved diesel-powered equipment as well as for nonpermissible equipment covered by § 75.1909. Although the majority of part 36-approved equipment is already provided with this feature, a limited number of machines will require modification. Because some mine operators will need to obtain field modifications and equipment manufacturers must obtain MSHA approval of design modifications, a 36-month compliance time is appropriate and is provided for in the final rule.

Section 75.1909 of the final rule requires that nonpermissible diesel-powered equipment be equipped with a supplemental brake system, which provides substantially the same features as would be provided by the automatic emergency parking brakes specified in

§ 75.523–3. Section 75.1909(e) requires setting of the supplemental brake system when the operator is not at the controls of the equipment, except during the movement of disabled equipment. Because part 36-approved equipment is provided with a supplemental brake system under the final rule, the requirement for setting of the supplemental brake has also been applied to this equipment.

Paragraph (b)(4) requires that equipment approved under part 36 have a particulate index and a dilution air quantity determined in accordance with part 7, subpart E within 12 months of the publication date of the final rule. The types of engines that are affected by this requirement are installed in permissible face equipment that is currently approved under part 36. Because of where and how this equipment is used, it significantly affects the air quality where miners work and travel. Diesel-powered face equipment includes haulage equipment and roof bolters, which are typically used in the confined environment in the production area of the face and operated almost continuously over the course of a shift. The contribution of diesel exhaust from this equipment into the mine atmosphere can be significant and can adversely affect the health conditions for miners working in and around the area where the equipment is being operated. Under new requirements in § 75.325 of the final rule, minimum ventilating air quantities are established for areas where diesel-powered equipment operates. These minimum quantities are derived from the approval plate ventilating air quantity for the equipment that is operating. Consequently, ventilating air quantities must be calculated for these engines so that the minimum air quantity requirements can be implemented. As mentioned elsewhere in this preamble, the particulate index will not be used to determine the minimum ventilating air quantity for the engine, but will be available for informational purposes.

There are only four engines models used in the majority of part 36-approved equipment used in underground coal mines. These engines are typically of older design, and it is uncertain whether the engine manufacturers will seek approval for their engine designs under subpart E of part 7. As a result, MSHA intends to determine dilution air quantities and particulate indices for these engines in accordance with part 7, subpart E, whether or not the manufacturers seek a subpart E approval for their engines. MSHA will make this information available to mine operators, which must be applied and implemented within 12 months of the date of the final rule's publication. This time frame is consistent with the 12-month effective date for compliance with the ventilation requirements of § 75.325(k) of the final rule that apply where diesel-powered equipment is operated.

Paragraph (b)(5) requires that permissible diesel-powered equipment that is manufactured 36 months or more after the publication date of the final rule and used in an underground coal mine incorporate a power package approved under part 7, subpart F. Under the proposal, only ''new'' diesel-powered equipment approved under subpart H or I or meeting the requirements of §§ 75.1909 and 1910 could be introduced into underground coal mines 60 months after the effective date of § 75.1907. This meant that both new permissible and nonpermissible equipment (that did not fall into the limited class or was not used as stationary unattended equipment) introduced in an underground coal mine after the deadline would have had to receive a full machine approval. One commenter recommended that the proposed 60-month delayed effective date be changed to 12 months. Another commenter suggested that the language be clarified to state that existing part 36 approvals remain valid.

The time frame for compliance has been reduced to 36 months in recognition of the fact that the final rule does not require full machine approval of all permissible and nonpermissible equipment, as contemplated by the proposal. Three years should be sufficient for equipment manufacturers to obtain approval for and incorporate subpart F power packages into the permissible diesel-powered equipment they manufacture. Part 36-approved equipment manufactured before the relevant date may continue to be used in accordance with its approval indefinitely.

Paragraph (c) requires nonpermissible diesel-powered equipment to comply with §§ 75.1909 and 75.1910 within 36 months of the publication date of the rule. Under the final rule nonpermissible equipment, which is used in areas where permissible electric equipment is not required, does not need full machine approval by MSHA. However, under § 75.1909(a)(1) nonpermissible equipment must be equipped with an engine approved under subpart E of part 7. The final rule did not adopt the proposed establishment of a limited class of nonpermissible light-duty equipment, for reasons explained in detail in the preamble to § 75.1908. Instead, the final rule establishes two categories of nonpermissible equipment, heavy-duty and light-duty. Under paragraph (c) of this section of the final rule, equipment in both categories must be provided with the safety features set forth in §§ 75.1909 and 75.1910. These features include engines approved under subpart E of part 7, fire suppression systems, brakes, and electrical protections. Several commenters stated that approved engines, power packages, or surface temperature controls are unnecessary for nonpermissible equipment, while other commenters considered surface temperature controls necessary.

The final rule's equipment safety requirements for nonpermissible diesel-powered equipment are intended to ensure that the equipment will not present a fire hazard and that gaseous diesel exhaust emissions and particulate emissions are addressed.

A compliance time of 24 months was proposed, and one commenter recommended a 12-month compliance time. The final rule allows 36 months for nonpermissible equipment to comply with the requirements of §§ 75.1909 and 75.1910. Included in these sections is a requirement that nonpermissible equipment be provided with an engine approved under subpart E of part 7. It is expected that this requirement will require the longest time period for compliance, as engine manufacturers must first obtain MSHA approval of appropriate engines. The 36-month time frame allows some models of nonpermissible equipment currently in use in underground coal mines to reach the end of its useful life and to be replaced with equipment that meets these requirements, rather than being retrofitted with a new engine and the other features required by §§ 75.1909 and 75.1910.

The final rule does not adopt the proposed provision allowing mine operators to seek MSHA approval for the extended use of diesel-powered locomotives because of the unavailability of approved power packages suitable for the mine conditions or for the locomotive's design. This provision recognized that certain types of diesel locomotives might not have been able to be retrofitted to meet all of the applicable equipment-related requirements. Because the final rule does not require approved power packages for nonpermissible equipment, a process for MSHA approval of extended use of nonpermissible locomotives without approved power packages is no longer

necessary, and has consequently not been adopted in the final rule.

Section 75.1908 Nonpermissible Diesel-Powered Equipment; Categories

This section of the final rule establishes three categories of nonpermissible diesel-powered equipment: heavy-duty equipment, which is defined as equipment that is used for such tasks as cutting or moving rock or coal, drilling or bolting, or moving longwall components; light-duty equipment, which includes any other nonpermissible equipment that is not heavy-duty; and a special category for ambulances and fire fighting equipment. Because nonpermissible equipment is used in areas of the mine where methane is not likely to accumulate, it is not required to be explosion-proof. However, all nonpermissible equipment, with the exception of ambulances and other emergency equipment described under paragraph (d), is required to have an engine approved under subpart E of part 7, which sets engine performance and exhaust emissions requirements.

The requirements that apply to nonpermissible equipment under the final rule vary according to the equipment's category. Most importantly, the equipment category determines which equipment safety features are required under §§ 75.1909 and 75.1910 of the final rule. One of the most important distinctions between heavy- and light-duty equipment under the final rule is that heavy-duty equipment is required to have an automatic fire suppression system under § 75.1909, while light-duty equipment may be provided with either a manual or automatic system. Additionally, heavy-duty nonpermissible equipment is subject to the weekly undiluted exhaust emissions test under § 75.1914(g) of the final rule, and must also be included in the air quantity calculation for multiple units of diesel-powered equipment under § 75.325(g). These provisions do not apply to light-duty equipment.

The final rule is a significant departure from the proposal, in response to a majority of commenters who were opposed to the proposed criteria for the equipment categories. The proposal would have established a special category of nonpermissible ''limited class'' equipment. Limited class equipment under the proposal would have been equipment weighing less than 6,000 pounds and equipped with an engine of less than 90 horsepower. Equipment with a hydraulic system could not be included in the limited class, although MSHA stated in the preamble to the proposal that this restriction was not intended to apply to hydraulic systems used in brake units or automotive-style power assist units. Additionally, the equipment engine could not be turbocharged. Portable equipment that fell into this class was limited to welders and compressors. The proposal also allowed altitude compensation devices to be used with limited class equipment.

Although limited class equipment under the proposal would have been required to have an engine approved under subpart E of part 7, the machine as a whole would not have been approved by MSHA. Instead, limited class equipment would have been required to be equipped with the safety features in proposed § 75.1909. All other nonpermissible equipment would have been required to have a subpart F or G approved ''power package,'' which would have included an approved engine with additional components to prevent the ignition of methane or combustible materials, such as surface temperature controls. Additionally, it was MSHA's intention, reflected in the advance notice of proposed rulemaking published with the proposal, to require whole machine approval of all nonpermissible equipment, except equipment that fell into the limited class defined under the proposal.

The equipment categories in the proposed rule were based upon the Diesel Advisory Committee recommendation that fire prevention features, including surface temperature controls and fire suppression systems, be required on all outby equipment. However, the Committee recognized that much of the light-duty equipment in use in mines was not specifically designed for mining and might not be available with surface temperature controls. The Committee therefore concluded that a limited class of light-duty equipment could be safely operated if it was equipped with fire prevention and protection features in lieu of surface temperature controls, such as fire suppression devices, reduction of the potential for fuels to contact hot surfaces, and reduction of potential ignition sources. Equipment in this limited class would be expected to operate on a light-duty cycle, and would not reach high temperatures or would reach high temperatures for a limited period of time, with a significantly reduced potential for fire.

Commenters expressed widely varying views on this aspect of the proposal. Most commenters supported the concept of a distinct class of equipment with less extensive safety requirements, but many stated that the criteria in the proposal for limited class equipment were unnecessarily restrictive, and that the class should be significantly broadened to include many more types of equipment, such as light-duty manned personnel and material haulage equipment. A number of commenters indicated that the equipment that they would consider light-duty equipment in their mines exceeded either the weight or horsepower restrictions of the proposal.

Other commenters were of the opinion that fire suppression systems were an acceptable substitute for surface temperature controls, and strongly supported a significant expansion of the equipment falling into the limited class and therefore not required to have a power package that would provide such controls. A number of commenters also indicated that much of the equipment currently in use in mines that did not fall into the proposed limited class would have to be replaced, because it would be impossible to retrofit the equipment to provide the required surface temperature controls. Other commenters were concerned that limitations based on existing equipment designs could discourage the development of new technology.

One commenter was generally opposed to the creation of a limited class that was not required to have surface temperature controls, because the commenter believed that this would present an unacceptable fire hazard. This commenter stated that heat sensors that triggered engine shutdown or fire suppression were not acceptable substitutes for surface temperature controls.

A number of commenters were opposed to the limitation on equipment weight, stating that weight had no relationship to the hazards presented by the equipment, and that the 6,000-pound restriction was arbitrary. One commenter stated that although weight in some cases could be an indicator of duty cycle and the potential for higher equipment operating temperatures and resulting fires, requirements for fire suppression and automatic engine shutdown when engine temperature reaches a specified limit would adequately address these concerns. Another commenter stated that most diesel equipment that exceeds 6,000 pounds is not used in heavy-duty applications such as coal production but is considered light-duty equipment.

Some commenters were particularly concerned about the safety impact of the weight limitation on railmounted equipment, pointing out that weight is needed to provide traction. These commenters stated that although some

rail-mounted equipment would fall below the proposed horsepower limitation, the weight of most rail-mounted equipment significantly exceeds 6,000 pounds, and that it would be neither practical nor feasible to modify existing outby track equipment to meet the proposed limited class criteria. Because of this concern, one commenter suggested that outby rail-mounted equipment be addressed in a separate category, without a weight restriction.

Several commenters also stated that the safety features that would be required on limited class equipment under proposed § 75.1909 would add to the vehicle weight, making the 6,000-pound restriction even more unrealistic in those commenters' opinion. One commenter estimated that equipment retrofits for safety features and for mine-worthiness would increase equipment weight by at least 50 percent. Another commenter suggested that the proposed weight limitation would result in overloading equipment units because of light construction. Some suggested that the weight limitation for limited class equipment be increased to 7,500 or 8,500 pounds; others recommended that the limit be increased to 14,000 to 15,000 pounds, to permit units to be manufactured with heavy steel to withstand collisions. One commenter recommended that the weight limitation be reduced to 4,000 pounds for self-propelled equipment.

A number of commenters were also opposed to the 90-horsepower limitation, stating that engine horsepower was no more an indication of whether equipment was heavy-duty or light-duty than was equipment weight. However, one commenter recommended that the limitation be reduced to less than 70 horsepower.

Commenters were also concerned about the prohibition against hydraulic systems on limited class equipment. Several commenters stated that there was no basis for excluding equipment with hydraulic systems from the limited class, except for the fact that hydraulic fluid could present a fire hazard. These commenters suggested that equipment with hydraulic systems that utilized fire-resistant hydraulic fluid should be permitted. Some of these commenters also suggested that equipment with hydraulic systems should be eligible for the limited class category if the equipment is equipped with a fire-suppression system. Other commenters stated that equipment with hydraulic systems had not been shown to be less safe than equipment without such systems. Some pointed out that hydraulic systems facilitate the handling of supplies and materials, making the job easier and safer. These commenters also believed that prohibiting hydraulic systems on limited class equipment would preclude other equipment features that enhance safety, such as power take-offs, automatic transmissions, and hydrostatic drive units.

Commenters were also opposed to the prohibition against turbocharged engines for limited class equipment. This restriction was included in the proposal because of the concern about the potential ignition of combustible materials on the hot exhaust system surfaces that are characteristic of turbocharged engines. Commenters stated that turbochargers have served as an effective means of yielding greater horsepower from smaller engines and should be allowed on limited class equipment, and that the exhaust components could be encased in protective insulating material to eliminate any fire hazard.

A number of commenters expressed concern that manufacturers of equipment that was not specifically designed for use in mines would not seek MSHA approval for their equipment because the share of the market for mining applications was too small to warrant the expense of developing power packages.

A number of commenters stated that inclusion of equipment in a limited class should depend on how the equipment is being used rather than on factors such as size and weight. Some of these commenters suggested that light-duty equipment include equipment that does not move rock, coal, or longwall shields. Other commenters advocated that all diesel-powered equipment, including limited class equipment, be designed to be explosion-proof and be approved by MSHA under part 7. These commenters felt that establishing a limited class of light-duty equipment would allow mine operators to use equipment with inferior means of fire prevention.

One commenter recommended that a determination of the equipment included in the limited class should be based on MSHA's evaluation of diesel equipment fire experience in other industries and in other countries as to which types of equipment do and do not pose a significant fire hazard. In response to this comment, MSHA acquired accident reports from the Ministry of Labor, Province of Ontario, Canada, containing detailed information of fires on diesel-powered equipment in underground mines in Ontario for the years 1984 through 1992. This information was carefully analyzed to determine which machine safety features and what type of equipment design are needed to prevent fires on diesel-powered equipment used in underground coal mines. An analysis of the Ontario fire data reveals that equipment used in heavy-duty type activities, such as hauling rock or coal or moving longwall components, presents a significant fire hazard and requires suitable fire prevention and protection features.

Consistent with these conclusions and also with the recommendations of a number of commenters, paragraphs (a)(1) through (a)(5) of this section of the final rule specify what constitutes heavy-duty equipment. Heavy-duty nonpermissible equipment includes equipment that cuts or moves rock or coal; equipment that performs drilling or bolting functions; equipment that moves longwall components; self-propelled diesel fuel transportation units and lube units; and machines used to transport portable fuel transportation units or lube units. These machines are intended to move rock or coal or other heavy loads, such as longwall components, or move large quantities of combustible diesel fuel as a normal part of their duty cycle. Locomotives used to transport rock or coal and portable diesel fuel transportation units or lube units would also be in the heavy-duty equipment category under the final rule. Graders would also be considered heavy-duty equipment, because they are used to move rock or coal.

Equipment falling within the heavy-duty equipment category under paragraph (a) is typically used for extended periods during a shift on a continuous, rather than intermittent, basis. This is in contrast to equipment that is used for limited periods during a shift, such as mantrips or supply vehicles. Heavy-duty equipment under the final rule also moves heavy loads or performs considerable work as in the case of drilling machines. Equipment used to haul longwall components is typically operated at a consistently accelerated pace under an extremely heavy load. Fuel transportation units and lube units generally are larger machines specially designed to transport and dispense diesel fuel, hydraulic fluid, grease, oil, and other combustible materials. This equipment also operates under a heavy load and typically moves constantly around a section during the course of a shift, refueling equipment as needed. Equipment that performs drilling and bolting functions generally has an engine that runs at a high rate of speed and powers large hydraulic systems. Under the final rule heavy-duty

equipment must be provided with an automatic fire suppression system, addressing the additional fire risks resulting from the way this equipment is used. Heavy-duty equipment also produces greater levels of gaseous contaminants, and under the final rule is therefore subject to weekly undiluted exhaust emissions tests under § 75.1914(g), and is included in the air quantity calculation for ventilation of diesel-powered equipment under § 75.325(g).

Under paragraph (b) light-duty equipment is defined as any other diesel-powered equipment that does not meet the criteria of paragraph (a). This is in contrast to the approach taken in the proposed rule establishing a limited class of light-duty equipment. Light-duty equipment under the final rule may include, but is not limited to, forklifts used to carry supplies, rock dusting machines, tractors not used to move rock or coal, supply trucks, water trucks, personnel carriers, jeeps, scooters, golf carts, and pickup trucks. The equipment may be rubber-tired, crawler-mounted, or rail-mounted.

Under the final rule two machines of the same model could fall into different equipment categories, depending on how they are used. For example, a load-haul-dump unit used to move rock or coal would be considered heavy-duty equipment, while an identical machine used exclusively to move supplies would be a light-duty machine, subject to different requirements. Although these machines are of the same design, they do not present the same risk of fire because of the way they are used. They also do not produce the same quantities of exhaust contaminants: machines that are operated for extended periods of time under heavy load generate more contaminants than machines that are not.

Equipment that is classified as light-duty may not be used, even intermittently, to perform the functions listed in paragraphs (a)(1) through (a)(5). This is because equipment that performs heavy-duty functions poses an increased fire risk, resulting in the need for an automatic fire suppression system, as required under § 75.1909 for heavy-duty equipment. On the other hand, heavy-duty equipment may be used to perform light-duty work.

The proposed restriction of portable limited class equipment to compressors and welders has not been adopted in the final rule. Although one commenter did support this restriction, most commenters were opposed to it, stating that it was arbitrary and unjustified as well as impractical. One commenter stated that the proposed restriction would require major replacement of diesel-powered portable equipment, either by electric-powered machines or by diesel equipment furnished with power packages. Other commenters suggested that attended diesel generators be added to the limited class because they presented safety concerns that were no greater than for welders and compressors.

In response to these comments, any type of attended portable diesel-powered equipment may be light-duty under the final rule, so long as it does not perform any of the functions listed in paragraph (a). As discussed more fully above, the distinction between light-duty and heavy-duty equipment has less significance under the final rule than it would have had under the proposal, since neither light-duty nor heavy-duty nonpermissible equipment will be required to have a surface temperature-controlled power package or be subject to fully assembled machine approval.

One commenter suggested that the term ''attended'' be defined in the final rule, and paragraph (c) specifies that attended diesel-powered equipment for purposes of subpart T includes: any machine or device that is operated by a miner; and any machine or device that is mounted in the direct line of sight of a job site located within 500 feet of such machine or device, which job site is occupied by a miner.

This definition of ''attended'' is largely derived from the definition of ''attended'' in existing § 75.1107–1 applicable to electric-powered equipment, although it has been tailored to address safety concerns unique to diesel-powered equipment, such as the fact that fires on diesel-powered equipment, unlike fires on electrical equipment, do not smolder for a very long time and therefore are less likely to be discovered before flaming and spreading. For this reason and unlike equipment under § 75.1107–1, attended equipment under paragraph (c) must be continuously attended while it is operating, regardless of whether it is during a production shift. Also unlike equipment under § 75.1107–1, attended equipment under paragraph (c) does not need to be attended by the person assigned to operate it. The definition of ''attended'' in this section permits prompt operator action in the event of a fault or fire on a diesel-powered machine. As discussed elsewhere in this preamble, the category of ''stationary unattended'' equipment has not been adopted in the final rule, and under § 75.1916(e) all diesel-powered equipment must be attended when operated.

Paragraph (d) establishes a special equipment category for diesel-powered ambulances and fire fighting equipment, which may be used underground only in accordance with the fire fighting and evacuation plan required under existing § 75.1101–23. This special category was included in the proposal under § 75.1907(b), but has been included in this section of the final rule with the other categories of nonpermissible equipment. Equipment that falls into this category is not required to have an approved engine or power package, or to comply with the requirements of §§ 75.1909 and 75.1910. Instead, such equipment must be used in accordance with the fire fighting and evacuation plan required under existing § 75.1101–23.

This provision was addressed by only a few commenters, who supported the establishment of a special class of diesel-powered equipment for emergency use, and has been adopted essentially unchanged from the proposal. The equipment under this paragraph may be used only during emergencies and the fire drills specified in the fire-fighting and evacuation plan. Very little equipment that is currently in use falls into this category. Mines that do have such equipment must provide MSHA with revised fire fighting and evacuation plans that adequately address the use of this equipment.

Sections 75.1909 and 1910 Design and Performance Requirements for Nonpermissible Diesel-Powered Equipment

Overview. Sections 75.1909 and 75.1910 of the final rule set forth the design and performance requirements that apply to nonpermissible diesel-powered equipment, except for the special category of emergency equipment established under § 75.1908(d) of the final rule. Section 75.1909 requires, among other things, nonpermissible diesel-powered equipment to be provided with engines approved under subpart F of part 7, fire suppression systems, fuel systems, and brakes. For ease of reference, electrical system requirements, which were proposed under § 75.1909, have been adopted in the final rule in § 75.1910.

As explained in greater detail in the preamble discussion for § 75.1908 of the final rule, the proposal would have established a ''limited class'' of light-duty equipment, which, although required to have an approved engine, was not otherwise subject to MSHA approval. Instead, limited class equipment would have been governed by the design and performance requirements set forth in proposed

§ 75.1909. This scheme was consistent with the recommendations of the Diesel Advisory Committee. Nonpermissible equipment that did not meet the criteria of the limited class would have been subject to fully assembled machine approval under subpart I of part 7, and would also have been required to be equipped with a power package approved under subpart G of part 7. Power packages provide the equipment with safety features such as surface temperature controls, exhaust temperature controls, and safety shutdown capability.

Although the proposal anticipated fully assembled machine approval of both permissible and nonpermissible diesel-powered equipment, MSHA specifically solicited comments on whether nonpermissible diesel-powered equipment should be approved by MSHA in an advance notice of proposed rulemaking published on the same day as the proposed rule. Many commenters to the proposal and to the advance notice were strongly opposed to fully assembled machine approval for nonpermissible equipment, stating that it was neither necessary for safety nor consistent with MSHA's approach to electrical equipment. These commenters stated that approval of nonpermissible diesel equipment would create significant technical hurdles and place unnecessary financial burdens on mine operators, without any justification from a safety perspective. These commenters recommended that the final rule set performance-oriented safety requirements for nonpermissible equipment in mandatory standards in part 75, and that the safety features that were proposed for the limited class of light-duty equipment in § 75.1909 be applied to all nonpermissible equipment.

Many commenters were also opposed to the proposed requirement that most nonpermissible equipment have a power package approved under subpart F or G of part 7. Commenters stated that the protections afforded by a power package were unnecessary for equipment operated in areas of the mine where methane is not likely to accumulate, and that much of the nonpermissible diesel-powered equipment currently in use would have to be either scrapped or significantly retrofitted to comply with the proposed requirements, at tremendous expense. Several commenters pointed out that it would be impossible to retrofit some types of equipment because of design limitations.

Other commenters supported full machine approval and power packages for all nonpermissible equipment, and further recommended that all diesel-powered equipment in underground mines be permissible and equipped with the explosion-proof equipment features required in areas of the mine where coal is extracted and where higher methane levels are a concern.

The final rule responds to commenters opposed to full machine approval for nonpermissible equipment, and does not adopt the proposed requirement for power packages on most nonpermissible equipment. It should be noted, however, that all nonpermissible equipment, with the exception of emergency equipment under § 75.1908(d), is required to have an engine approved under subpart E of part 7.

In evaluating whether an approval program for nonpermissible diesel-powered equipment was warranted in the final rule, MSHA considered whether the machine safety features set forth in proposed § 75.1909 for the limited class of light-duty equipment could be modified to provide adequate protection for heavy-duty equipment. This review revealed that many requirements in proposed § 75.1909 could be applied directly to heavy-duty equipment without revision, while other proposed requirements could be made suitable with slight revisions.

The safety features proposed in § 75.1909 for limited class equipment have been adopted in the final rule in §§ 75.1909 and 75.1910 to cover equipment that is larger and more powerful than what would have been covered under the proposed rule. This is in response to a number of commenters who believed that these proposed requirements should be applied to both heavy-duty and light-duty equipment, in lieu of a full machine approval program. In general, the proposed requirements have not been substantially changed in the final rule, although the final rule does adopt several additional requirements for heavy-duty equipment based on requirements in part 36 or developed from existing part 75 requirements applicable to electric-powered machines. Other additions or revisions have been made in response to comments received on proposed § 75.1909 and in response to the advance notice of proposed rulemaking.

Section 75.1909 Nonpermissible Diesel-Powered Equipment—Design and Performance Requirements

Section 75.1909 establishes design and performance requirements for diesel-powered equipment used where nonpermissible electric equipment is permitted, with the exception of the special category of equipment under § 75.1908(d). The requirements of this section are consistent with the recommendation of the Advisory Committee that such equipment be provided with fire suppression system and fuel and electrical system protection. All nonpermissible equipment, with the exception of the special category of emergency equipment under § 75.1908(d), is also required to be provided with an approved engine within the time frames established in § 75.1907 of the final rule.

Paragraph (a)(1), like the proposal, requires that nonpermissible diesel-powered equipment be equipped with an engine approved under subpart E of part 7. The final rule also requires that the engine be equipped with an air filter and an air filter service indicator. The air filter must be sized and the service indicator set in accordance with the engine manufacturer's recommendations.

Some commenters stated that approved engines were not necessary on outby equipment. Other commenters recommended that all equipment used in outby areas be provided not only with an approved engine, but also with a permissible power package approved under subpart F of part 7.

The final rule adopts the proposed requirement that nonpermissible equipment be provided with an approved engine. Engines approved under subpart E of part 7 must meet specific gaseous emission standards and be provided with an approval plate indicating the quantity of ventilating air needed to dilute gaseous contaminants to acceptable levels. These requirements not only place limits on the quantity of gaseous contaminants that an approved engine may produce, they also provide a scheme for control of those contaminants through effective ventilation. Commenters expressed serious concern over unhealthful exhaust emissions from diesel equipment in outby areas that may significantly affect the quality of air that miners breathe. In response to these concerns, the final rule takes a comprehensive approach in addressing health hazards presented by diesel exhaust, and requires clean-burning engines, approved by MSHA under subpart E of part 7, on all diesel-powered machines, including nonpermissible equipment. Engines installed in this equipment must therefore meet the emissions standards established in subpart E of part 7.

The final rule does not adopt the suggestion of commenters who supported requiring all diesel equipment in underground coal mines

to be permissible. The explosion- proof features provided by a subpart F power package are not needed for outby equipment, because the equipment operates in areas of the mine where methane is not expected to accumulate. Electrical equipment without explosion-proof features has been operated safely in outby locations for many years.

The requirement that the engine be equipped with an air filter and an air filter service indicator has been added in response to commenters'' statements that clogged air filters were the single most frequent cause of smoky engines, resulting in the production of disproportionate quantities of carbon monoxide and diesel particulate. These components are typically supplied as part of the equipment, and the air filter service indicator will enable the equipment operator and maintenance personnel to ensure that the air filter is in good condition. Both the size of the air filter and the setting of the air filter service indicator are best determined by the engine manufacturer, and the final rule requires that these be determined in accordance with the engine manufacturer's recommendations.

Paragraph (a)(2) has been added to the final rule and requires that nonpermissible equipment be provided with at least one portable multipurpose dry chemical type (ABC) fire extinguisher, listed or approved by a nationally recognized independent testing laboratory, and having a 10A:60B:C or higher rating. The extinguisher must be located within easy reach of the equipment operator and be protected from damage. This requirement has been added to the final rule in response to a commenter who supported requiring two chemical fire extinguishers accessible to each end of the unit and protected from external damage. MSHA agrees with this recommendation, which is consistent with good fire prevention practices and which will provide additional fire protection on diesel-powered machines. One rather than two fire extinguishers has been required, however, because one extinguisher, accessible to the operator and protected from damage, is adequate for virtually all diesel-powered equipment. As discussed elsewhere in the preamble, this equipment is also required to be equipped with either an automatic or manual fire suppression system, depending on the equipment category.

Paragraph (a)(3) has been adopted from the proposal, and requires that the equipment's fuel system be specifically designed for diesel fuel, and that it meet specific additional criteria. One commenter recommended that this provision be revised to require a fuel system ''specifically designed and constructed to minimize the possibility of a fire in case of a collision or refueling''. The commenter stated that fuel tanks on most light-duty equipment, such as pickup trucks, already meet certain standards, and that it would be unwise from a safety standpoint to modify these tanks. The final rule has not been revised in response to this comment. The fuel system requirements in the final rule are designed to address safety hazards presented by the use of diesel equipment in the underground mine environment, and nonspecific concerns about retrofitting equipment do not outweigh the protections afforded by the fuel system criteria included in the final rule. However, a fuel system that meets applicable industry standards would be acceptable so long as it also meets the criteria in paragraphs (a)(3)(i) through (xi).

Paragraph (a)(3)(i) provides that the fuel system must have a fuel tank and fuel lines that do not leak. The proposed rule, unlike the final rule, would have required that the fuel tank be of ''leakproof construction.'' Several commenters stated that the term ''leakproof construction'' was ambiguous and needed to be defined in the final rule, or be revised to provide for construction that was ''designed to prevent leaks''. Rather than providing a definition for ''leakproof construction'' and specifying design or construction requirements to protect against leakage, the final rule sets a performance standard and simply requires that the fuel tank and fuel lines not leak, allowing mine operators the flexibility to determine how to best comply with this requirement. Fuel lines have been included in this requirement under the final rule, in response to commenters who were concerned about fire hazards presented by leaking fuel lines on diesel-powered equipment coming into contact with hot engine surfaces.

Paragraph (a)(3)(ii) adopts the proposed requirement that the fuel tank be substantially constructed and protected against damage by collision. Commenters generally supported this requirement. The tank may be protected from damage by collision by being located within the frame components of the machine, or be constructed of material that is sufficiently sturdy so that the tank will not be damaged by collision with other vehicles or with the mine roof, rib, or floor. It should be noted that although the term ''tank'' is used in the singular here and in other paragraphs of this section, the final rule is not intended to limit the number of tanks on equipment. Several models of pickup trucks are manufactured with dual fuel tanks, and this configuration is acceptable under the final rule.

Paragraph (a)(3)(iii) requires that the fuel system be provided with a vent opening that maintains atmospheric pressure in the tank, and which is designed to prevent fuel from splashing out. The proposed rule would have required that the size of the vent prevent fuel from splashing out of the vent opening. This requirement has been modified slightly in the final rule to specify that the design rather than the size of the vent opening must prevent fuel from splashing out, in response to commenters who advocated requirements that were more performance-oriented. This minor revision will allow mine operators increased flexibility in satisfying this requirement. MSHA anticipates that the vent provided in the fuel filler cap will satisfy this requirement.

Paragraph (a)(3)(iv) requires a self-closing filler cap on the fuel tank. The proposed rule would have required either a tethered cap or a self-closing cap. The final rule requires a self-closing fuel cap that will serve to minimize fuel spillage, and responds to commenters'' serious concerns about the hazards of fuel spillage.

Paragraph (a)(3)(v) requires that the fuel tank, filler and vent be located so that any leaks or spillage during refueling will not contact hot surfaces. This requirement has been revised from the proposed rule, which would have required that these components be located to prevent fuel from contacting hot engine surfaces. The final rule has been revised from the proposal because of the application of the requirements of this section to all nonpermissible diesel-powered equipment, not just equipment falling in the proposed limited class. This modification recognizes that there are additional machine components, particularly on larger heavy-duty equipment, now falling under this requirement that reach temperatures that could ignite diesel fuel. For example, brake components can reach temperatures that are as high as engine temperatures.

Paragraph (a)(3)(vi) requires that fuel line piping be either: steel-wire reinforced; synthetic elastomer-covered hose suitable for use with diesel fuel that has been tested and has been determined to be fire-resistant by the manufacturer; or metal. The proposal would have required metal fuel line piping. Several commenters stated that requiring fuel line piping to be made of metal was too restrictive. Several of these commenters stated that metal fuel

lines could deteriorate over time as a result of machine vibration, and that there were fuel lines made of other materials that were superior in strength and performance to metal lines. The final rule has been revised from the proposal to address these concerns. Synthetic elastomer-covered hose must be of a type that is suitable for use with diesel fuel, and must have been tested and determined to be fire-resistant by the manufacturer, using any one of a number of fire-resistance tests. Such tests have been developed by a number of organizations, including Underwriters Laboratories, The Society of Automotive Engineers, and the U.S. Coast Guard. MSHA's tests for flame-resistance specified in regulations at part 18 would also be appropriate. This will ensure that material used for diesel fuel lines will have adequate fire-resistance in the underground coal mine environment.

Paragraph (a)(3)(vii) adopts the proposed requirement that fuel line piping be clamped. One commenter stated that this requirement, along with the requirement that primary fuel lines be located so that fuel line leaks do not contact hot surfaces, would limit machine design flexibility. This commenter recommended that these requirements be revised to provide that the manufacturer's design provide maximum protection from damage. The final rule does not adopt this suggestion. The requirements identified by the commenter are intended to address potential hazards on diesel equipment, particularly fire hazards. The fact that there may be some resulting limitations on machine design, alone, does not warrant the elimination of requirements that address specific hazards.

Paragraph (a)(3)(viii), like the proposal, requires primary fuel lines to be located such that leaks do not contact hot surfaces. The fuel lines referred to in this paragraph are the supply and return lines connecting the fuel tank to the engine, not those lines that are integral to the engine and installed by the engine manufacturer, such as the lines connecting the injector pump to the injectors. Several commenters supported this requirement, pointing to the potential for fire resulting from leaking fuel dripping on hot exhaust components. One commenter recommended that the engine be designed to shut down in the event of a leaking fuel line. This comment has not been adopted in the final rule, in part because MSHA is unaware of any existing technology that would provide such a function. Additionally, such a requirement is not necessary, given the fuel system design criteria under this section in conjunction with the weekly equipment inspections required by § 75.1914 of the final rule. These requirements together adequately address the potential hazard created by leaking fuel lines.

Paragraph (a)(3)(ix) requires fuel lines to be separated from electrical wiring and protected from damage in ordinary use. This requirement has been adopted from the proposal, and was supported by several commenters, who mentioned incidents where fuel lines were exposed to damage. Separation of fuel and electrical lines can generally be easily accomplished. On machines where both electrical lines and fuel lines are routed through a machine articulation joint, fuel lines must be bundled separately from electrical lines and must be positioned so that fuel leaks will not contact electrical lines.

Paragraph (a)(3)(x) requires that a manual shutoff valve be installed in the fuel system as close as practicable to the tank. The language of the final rule has been modified from the proposal, which would have required the valve to be located ''near'' the tank. This change is made in response to a commenter who stated that valves located ''near'' the tank would not necessarily be easily accessible to the equipment operator or other mine personnel when the fuel supply needs to be shut off in an emergency or for maintenance. The commenter recommended that this aspect of the proposal be revised to require shutoff valves as close as practicable to the tank, and the final rule adopts this comment.

Paragraph (a)(3)(xi) adopts the proposed requirement that equipment be provided with fuel filter(s) and a water separator. The final rule substitutes the term ''water separator'' for the term ''water strainer'' used in the proposal. The terms mean the same thing, but ''water separator'' is more commonly used and more widely understood. Although commenters generally supported this requirement, one commenter stated this requirement should be eliminated because fuel filters and water separators were not necessary. MSHA disagrees with this commenter, and the proposed requirement has been included in the final rule. Fuel filters filter out particulate matter in fuel, thereby reducing diesel exhaust emissions as well as slowing engine wear. Water separators filter out water in the fuel, and minimize fuel system corrosion. Several commenters recommended that the proposed requirement be revised to permit the use of a single device that functions as both a fuel filter and a water separator. Such combination devices will satisfy the requirements of this section. The final rule has not been revised, however, because the language as proposed and as adopted in the final rule does not preclude the use of a combination fuel filter/water separator.

The proposed requirement for a fuel tank drain plug has not been adopted in the final rule. Although the drain plug is usually provided on larger mining equipment, it is typically not provided on light-duty equipment such as pickup trucks. Although a drain plug is a convenient feature for persons performing equipment maintenance, it is not necessary from a strict safety standpoint. For these reasons, a fuel tank drain plug is not required under the final rule.

Paragraph (a)(4) adopts the requirement of the proposal for a sensor to monitor the temperature and provide a visual warning of an overheated cylinder head on air-cooled engines. This feature is necessary because it reduces potential fire hazards on air-cooled engines. While such sensors do not completely eliminate the hazards of hot surface temperatures, they do provide additional protection by warning the equipment operator of overheating. The proposed rule would have required a temperature sensor to be located in the engine compartment that would automatically activate an intake air shutdown device to stop the engine before the engine compartment temperature exceeded the actuation temperature of the fire suppression system. This requirement has not been adopted in the final rule. Although commenters generally supported the concept behind this requirement, they had varied concerns about its application and impracticality from a technological standpoint. One commenter stated that this requirement could create a safety hazard because the engine could be shut off unexpectedly. Since loss of steering and braking could result, this commenter recommended that the engine be shut off only upon actuation of the fire suppression system. Several commenters stated that use of manual fire suppression systems on equipment was incompatible with this requirement.

MSHA agrees that this proposed requirement could have resulted in the equipment losing control of the machine in the case of unexpected engine shutdown, and the engine should only be shut down upon actuation of the fire suppression system. The automatic engine shutdown under the proposal would have been triggered before the engine temperature exceeded the actuation temperature of the fire suppression system. Section 75.1911(d)

of the final rule already requires fire suppression systems for diesel-powered equipment to provide for automatic engine shutdown, and a redundant requirement for automatic engine shutdown at a lower temperature is not necessary. An increase in the engine compartment temperature may reflect an engine malfunction, such as loss of engine coolant, but does not necessarily indicate a safety hazard. Linking engine shutdown to the engine compartment temperature would have provided protection against engine damage rather than addressing a discrete safety hazard. Equipment manufacturers routinely provide gauges in the equipment operator's compartment that indicate engine faults. Equipment operators will be alerted by this warning system and will then be able to shut the engine down, if appropriate. For these reasons, the proposed requirement for automatic engine shutdown based on engine compartment temperature has not been adopted in the final rule.

Paragraph (a)(5) requires that guarding be provided to protect fuel, hydraulic, and electric lines when such lines pass near rotating parts and to protect the lines in the event of shaft failure. This requirement is intended to prevent leaks and short circuits caused by fuel, hydraulic, and electric lines abrading against rotating parts. Rotating parts include machine components such as pulleys, belts, fans, and shafts. This requirement is similar to that of the proposal, although the proposed rule had specified that ''adequate guarding'' be provided and did not include protection for hydraulic lines or protection in case of shaft failure. The word ''adequate'' is redundant in this context and has not been adopted in the final rule. The reference to ''hydraulic lines'' was not included in the proposal because no hydraulic systems were permitted on the limited class of equipment for which the requirement was proposed. Under the final rule these requirements apply to larger equipment with hydraulic systems, and protection for hydraulic lines has therefore been added. Guarding to protect against shaft failure has also been added to the final rule to address the design features of the larger equipment now governed by these requirements. MSHA has received reports of several fires ignited by broken shafts that damaged hydraulic and electrical lines.

One commenter supported this requirement, while another commenter believed that it was unnecessary. A third commenter recommended that the engine compartment be shielded by metal from hydraulic components. Protection for fuel, hydraulic, and electrical lines is an essential element in preventing fires. The final rule does not specify what method must be used to comply with this requirement, because a number of different methods, including guarding, shielding as recommended by the commenter, or relocation of fuel, hydraulic or electrical lines, can provide adequate protection.

Paragraph (a)(6) has been added to the final rule and requires that hydraulic tanks, fillers, vents, and lines be located so that any spillage or leaks will not contact hot surfaces. This requirement has been added to the final rule to supplement the guarding of hydraulic lines in paragraph (a)(5) and is supported by the Ontario fire accident data, which show that leaking hydraulic lines contribute to fires. This requirement was not included in the proposal because, as explained in the discussion of paragraph (a)(5), hydraulic systems would not have been permitted on the limited class of light-duty equipment to which the requirement would have applied under the proposal. This requirement will ensure that spills and leaks of combustible hydraulic fluid do not contact hot equipment surfaces. This requirement can be satisfied by relocation of machine components, or by directing spills and leaks away from hot surfaces by means of splash guards or other such devices.

Paragraph (a)(7) requires that reflectors or warning lights which can be readily seen in all directions be mounted on equipment. This requirement was generally supported by commenters and is adopted unchanged from the proposal. A determination of whether the reflectors or warning lights can be ''readily seen'' must be based on the unique mine conditions, and must take into account such things as equipment size in relation to the mine entry and undulating mine terrain.

Paragraph (a)(8) has been added to the final rule in response to comments, and requires that a means be installed on the equipment to direct exhaust gas away from the equipment operator and persons on board the machine. This requirement is intended to provide for the discharge of exhaust gases away from persons on the machine to the greatest extent practicable, minimizing their exposure to excessive levels of unhealthful diesel exhaust contaminants. The exhaust pipe must direct the flow away from any area where a machine operator or a passenger could be located. Exhaust pipes that extend straight up and that would allow the exhaust to flow back over the equipment operator as the machine moves forward, such as on some agricultural and commercial equipment, are unacceptable under the final rule. This requirement is added to the final rule in response to the recommendation of two commenters, one of whom noted that exhaust gases can build up in the operator's compartment of a machine.

Paragraph (a)(9) has been added to the final rule in response to a commenter and as a result of the expansion of the class of equipment subject to the requirements of this section. This paragraph requires that a means be provided to prevent unintentional free and uncontrolled descent of personnel-elevating work platforms. Personnel-elevating work platforms normally are equipped with hydraulic systems and would consequently not have been eligible for inclusion in the category of limited class equipment under the proposed rule. This requirement is currently applied to equipment approved under existing part 36. Hydraulically operated personnel-elevating platforms meeting the applicable American National Standards Institute criteria for personnel-elevating platforms (i.e., ANSI A92.2 and A.92.5) would be acceptable. This requirement also applies to work platforms which utilize other methods to raise the platform, such as wire ropes. The machine must be provided with a specific feature that prevents the free and uncontrolled descent of the platform in the event of a failure in the lifting system, such as a ruptured hydraulic hose or broken wire rope. In such a situation, the platform must descend at a rate which will not endanger miners located on or below the platform.

Paragraph (a)(10) has been added to the final rule and requires that all nonpermissible equipment be provided with a means to prevent the spray from ruptured hydraulic or lubricating oil lines from being ignited by contact with engine exhaust system component surfaces. This requirement achieves the goal of the limitation of surface temperatures in proposed subpart G of part 7, which is not adopted in the final rule, and recognizes that high surface temperatures on diesel-powered equipment can be controlled in ways other than the water-jacketing of hot engine components contemplated under proposed subpart G. The requirement of this paragraph, in conjunction with other requirements in the final rule for control of fuel sources on diesel-powered machines, will provide effective fire prevention on nonpermissible diesel-powered equipment used underground.

The requirements of this paragraph are performance-oriented, and are

intended not only to allow flexibility in compliance but also to accommodate new technology developed in the future. One method of achieving compliance with this requirement is through the use of a water-cooled manifold. A safety component system certified under part 36 or a power package approved under subpart F of part 7 of the final rule also satisfies the requirement of this paragraph.

Non-absorbent insulating materials are also available for use on mining equipment to reduce the surface temperature of diesel exhaust system components. Such materials, which were first developed for diesel-powered military vehicles, are impervious to hydraulic fluid, lubricating fluids, and diesel fuel, and have been successfully used on mining equipment in the United States and Canada. Use of these materials can reduce surface temperatures of exhaust components to less than 300 °F, and may also be used to prevent contact of hydraulic fluid and lubricating oil with hot surfaces. The goal of applying the insulating material is to substantially reduce the surface area of the exhaust system that is at elevated temperatures, because of the direct relationship between the area of a hot surface and the likelihood of ignition of a spray of hydraulic fluid. A large area of exhaust component, which includes the turbocharger, at a high temperature is more likely to ignite a spray.

The use of shielding or partitions to isolate hydraulic components from the engine would also satisfy the requirement of this paragraph, preventing the fluid from contacting the engine in the event of a leak. One commenter retrofitted a diesel-powered machine to provide shielding of the engine.

Paragraph (b) sets forth additional requirements for self-propelled nonpermissible diesel-powered equipment, which are specifically designed for equipment that moves under its own power, as opposed to equipment that is towed. Paragraph (b)(1) has been added to the final rule and requires a means to ensure that no stored hydraulic energy that will cause machine articulation is available after the engine is shut down. As discussed elsewhere in the preamble, requirements relating to hydraulic systems were not included in the proposal because the affected equipment could not have hydraulic systems. This requirement is intended to eliminate accidents where an equipment operator inadvertently activates the steering controls on articulated vehicles when entering or exiting the operator's compartment. In many articulated machine designs, personnel must enter the equipment operator's compartment through the articulation area. If the articulation joint were to close as the operator entered the compartment, the operator could be crushed. This requirement will also protect miners who encounter a machine that has been shut down and who may accidentally activate the control levers. Under the final rule, the stored hydraulic energy does not have to be dissipated instantly. The time permitted for dissipation of the stored energy will depend on the machine design and the amount of movement the machine is capable of after shutdown.

Paragraph (b)(2) has been added to the final rule in response to a specific comment that equipment should only be able to start in neutral. This paragraph requires equipment to be provided with a neutral start feature which ensures that engine cranking torque will not be transmitted through the powertrain and cause machine movement on vehicles utilizing fluid power transmissions. MSHA agrees with the commenter that this requirement is necessary, because some types of diesel-powered equipment may be started with the transmission in gear. This could result in power being delivered to the driving wheels of the machine before the equipment operator is in control of the vehicle, endangering both the operator and miners working in the vicinity of the equipment. Equipment must be designed such that its transmission is in either neutral or park before the starter will crank the engine.

For machines with steering wheels, brake pedals, and accelerator pedals, paragraph (b)(3) requires that the controls be arranged consistent with standard automobile orientation. This requirement has been added in response to a commenter who was concerned that equipment operators could become confused in the operation of equipment controls. Under this paragraph the brake pedal must be on the left and the accelerator must be on the right when the operator is facing the controls. Clockwise rotation of the steering wheel must turn the machine to the right, and counter-clockwise rotation of the steering wheel must turn the machine to the left. For machines with seating perpendicular to the direction of travel, the forward direction of travel and the automobile orientation of the controls are to be defined with respect to the front end of the equipment. For machines where the operator changes seats depending on the direction of travel, the machine control movements should also change accordingly, to retain the automobile orientation.

Paragraph (b)(4), like the proposal, requires self-propelled equipment to be provided with an audible warning device conveniently located near the operator. Such a device could be a horn or bell, and must be capable of being heard over the operation of the machine by miners in the area. Commenters were generally supportive of this provision.

Paragraph (b)(5) requires that lights be provided and maintained on both ends of the equipment. Equipment normally operated in both directions must be equipped with headlights for both directions. The proposal would have required self-propelled equipment to be provided with headlights, tail lights, and back-up lights. The requirement in the final rule is derived from the proposal but has been revised to better address typical lighting configurations on all types of nonpermissible equipment, not only the limited class of equipment that would have been affected under the proposal. For equipment such as ramcars, headlights on each end of the machine would be required, but not tail lights or back-up lights. For pickup trucks, headlights and back-up lights installed as original equipment would satisfy this requirement. The lights required by this paragraph are in addition to the warning lights or reflectors required by paragraph (a)(7) of this section.

Under the proposal lights would have been required to be ''protected from accidental damage''. The final rule requires instead that lights be ''maintained'', in response to a commenter who questioned what was meant by ''protected from accidental damage.'' Under the final rule equipment lights must be kept in working order, and replaced if they burn out or are damaged.

Although most commenters generally agreed with the proposed requirement, one commenter supported a requirement for back-up alarms or other means to alert miners to a change in the direction that equipment is moving. Although a back-up alarm may be appropriate on some equipment, an alarm on equipment that normally operates in both directions is not advisable because the alarm would be set off on a regular basis, defeating its effectiveness as a warning system. This suggestion has therefore not been adopted in the final rule.

Paragraph (b)(5) also requires equipment that normally operates in both directions to be equipped with headlights for both directions. One commenter recommended that lights be designed for operation in both

directions at once. This commenter noted that normally the light switch allows the lights to be on in only one direction and that it would be beneficial to observe the load while traveling in the other direction. Although this feature may be appropriate under some circumstances, it would provide no significant safety benefit and is not warranted for inclusion as a general machine feature. In many mines, the fact that lights are illuminated in only one direction at a time allows other miners in the vicinity to determine the equipment's direction of movement and provides some safety benefit. Illumination of both sets of lights at the same time would eliminate this capability, and this suggestion has therefore not been adopted in the final rule.

Paragraph (b)(6) requires that self-propelled nonpermissible equipment be provided with service brakes that act on each wheel of the vehicle and that are designed such that failure of any single component, except the brake pedal or similar actuation device, does not result in a complete loss of service braking capability. This paragraph requires two separate brake systems and ensures that, in the event of the failure of one braking system, the other system can bring the machine to a controlled stop. The only common component permitted in the two systems is the brake pedal or a similar device, such as a lever or button that is actuated by the equipment operator. This requirement has been adopted from the proposal with slight revisions to specify that the service brakes ''act on each wheel'' instead of ''for each wheel''. This will allow the use of axle brakes, which act on all of the wheels on that axle. This requirement prohibits drive line brakes in which failure of a single drive shaft or chain results in the loss of all braking capability. A split brake system with two completely independent hydraulic circuits with an automotive-type dual piston master cylinder complies with this requirement.

The proposal provided that failure of one ''brake line'' must not result in a complete loss of service braking capability. This language has been changed to provide that failure of any ''single component'' must not result in a complete loss of service braking capability, to conform the requirement to the expanded range of equipment that is governed by this requirement under the final rule.

The brake pedal or other interface between the equipment operator and the braking system is excluded from this requirement. If the pedal is connected to more than one link to activate the brake systems, those links must provide for independent actuation of the brake systems in the event of the failure of one of the links. Drive line brakes are not adequate because of the frequent failure of universal joints. The failure of the universal joint could result in the loss of all braking ability if a second brake system is not provided. Most agricultural equipment and some commercial equipment used in mines, such as high lifts or backhoes, may need a retrofit of their braking systems to comply with this requirement.

Several commenters supported this requirement and recommended two braking systems independent of each other in all working aspects. Other commenters noted that a single brake system would be adequate for tractor-type vehicles because they travel at speeds of less than 15 mph. MSHA disagrees that the low speeds of this type of equipment eliminates the need for two brake systems. Failure of an equipment's brake system in the confined area of an underground coal mine could result in serious injury or death, even at speeds of 15 mph or less. The final rule therefore does not incorporate this comment. Other commenters were of the opinion that the brake systems should not be separate for each wheel. This recommendation has been incorporated into the language of the final rule.

Paragraph (b)(7) has been adopted unchanged from the proposal and requires self-propelled nonpermissible equipment to be provided with service brakes that can safely bring the fully loaded vehicle to a complete stop on the maximum grade on which it is operated. No stopping distance or braking force is specified in the final rule, to allow flexibility in equipment design and usage. Compliance with this requirement is highly site-dependent because of the variation in mine grades. The mine operator is responsible for ensuring that equipment with adequate grade-holding ability is used at a particular location. Commenters generally supported this requirement.

Paragraph (b)(8) has been added to the final rule and requires that no device that traps a column of fluid to hold the brake in the applied position be installed in any brake system, unless the trapped column of fluid is released when the operator is no longer in contact with the brake activation device. This requirement prohibits the installation of ''park'' brakes devices which rely on a trapped column of fluid, and has been included in response to the suggestion of commenters. The use of such devices can present serious hazards, and are prohibited. Because the temperature of hydraulic brake fluid increases due to usage, a column of fluid trapped at a sufficient pressure will initially apply the brakes sufficiently to hold the machine stationary. However, as the fluid cools it contracts, lowering the pressure and possibly releasing the brakes. These devices are not permitted even as supplemental devices, because of the risk that equipment operators would use them as park brakes even if another park brake is provided. Several fatal accidents have been attributed to use of these devices, also called ''mico lock braking systems''.

This requirement does not apply to normal automotive-type service brakes which trap a column of fluid, as long as the operator is applying pressure to the foot pedal. This requirement also does not preclude the use of hydrostatic drive wheel motors that are designed and maintained to function as service brakes. These wheel motors do not necessarily lose their service braking ability if the fluid cools or if minimal leakage occurs. The wheel motors can act to maintain continuous pressure in the braking circuit. Although hydrostatic wheel motors can function as adequate service brakes, these systems do not provide adequate parking brake capability. For the wheel motor to maintain pressure in the braking circuit, the wheel must turn slightly, thereby permitting the machine to move very slowly down the grade. This movement is insignificant during the short period of time the service brakes are applied. However, if wheel motors are used as parking brakes, the machine can move a significant distance when the equipment operator is away from the machine. This can endanger miners who may be working near the machine in the confined area of the mine.

Paragraph (c) has been added to this section of the final rule to specifically address self-propelled nonpermissible heavy-duty diesel-powered equipment meeting the requirements of § 75.1908(a), except rail-mounted equipment. These requirements have been added to the final rule in response to the additional types of equipment that are now subject to the requirements of this section. Heavy-duty equipment that hauls rock, coal, or longwall components or transports large quantities of diesel fuel are governed by these safety requirements, and must be provided with a supplemental braking system that meets specified criteria. The criteria for these braking systems were developed from the criteria contained in § 75.523–3, applicable to automatic emergency parking brakes on similar

types of electrical equipment. There was widespread support for applying these braking requirements to diesel-powered equipment, in comments submitted in response to the advance notice of proposed rulemaking addressing equipment approval and machine safety features. Although there was a difference of opinion among these commenters as far as whether these braking requirements should be incorporated as part of an equipment approval program, commenters did agree that they be included as machine features either in an approval program or as mandatory safety standards in part 75. Commenters also recommended that there should be separate brake requirements for rail-mounted equipment. The Agency agrees with these comments, and has concluded that existing brake requirements in §§ 75.1404 and 75.1404–1, which apply to both electric and diesel-powered rail-mounted equipment, provide sufficient protection. Rail-mounted equipment has therefore been specifically excluded from this requirement under the final rule.

Existing § 75.523–3 specifies different requirements for two types of electric-powered equipment: haulage equipment and all other equipment. Electric-powered haulage equipment is very similar in function to the heavy-duty diesel-powered equipment subject to this requirement. Paragraphs (c)(1) through (c)(5) of this section of the final rule closely track the brake system requirements for electric haulage equipment in existing § 75.523–3, with the exception of the requirement that the brake be engaged by an emergency deenergization device or panic bar. A panic bar is appropriate for only some types of permissible diesel-powered equipment, and will be addressed during the part 36 approval process. Panic bars are not required for nonpermissible diesel-powered equipment. Under the final rule, self-propelled nonpermissible heavy-duty diesel-powered equipment, except rail-mounted equipment, is required to have a supplemental braking system that: (1) Engages automatically within 5 seconds of shutdown of the engine; (2) safely brings the equipment when fully loaded to a complete stop on the maximum grade where it is operated; (3) holds the equipment stationary, despite any contraction of brake parts, exhaustion of any nonmechanical source of energy, or leakage; (4) releases only by a manual control that does not operate any equipment function; (5) has a means in the equipment operator's compartment to apply the brakes manually without the engine operating, and a means to release and reengage the brakes without the engine operating; and (6) has a means to ensure that the supplemental braking system is released before the equipment can be trammed, and is designed to ensure that the brake is fully released at all times when the equipment is trammed.

Paragraph (c)(6) has been added to the final rule and requires that the supplemental braking system have a means to ensure that the system is released before the equipment can be trammed. It further requires that the system be designed to ensure the brake is fully released at all times while the equipment is trammed. This requirement is added to the final rule to address the hazard of dragging brakes, which were the cause of numerous fires reported in the Ontario fire data analyzed by MSHA in response to a commenter's recommendation. Some manufacturers install a lever on the transmission gear selector to ensure that the supplemental brakes are released. This lever automatically releases the brake when the operator shifts the transmission into gear.

Paragraph (d) applies to self-propelled nonpermissible light-duty diesel-powered equipment meeting the requirements of § 75.1908(b), except rail-mounted equipment. This provision, which has been adopted from the proposal, requires that the equipment be provided with a parking brake that holds the fully loaded equipment stationary on the maximum grade on which it is operated despite any contraction of the brake parts, exhaustion of any nonmechanical source of energy or leakage. This requirement was developed from existing § 75.523–3(d), which addresses parking brakes for electric-powered equipment other than haulage equipment, which is similar to the equipment in the light-duty category under § 75.1908(b) of the final rule.

A parking brake meeting the requirements of paragraph (d), rather than the supplemental brake system required for heavy-duty equipment under paragraph (c), is adequate for light-duty equipment, which is typically used for transportation or moving of supplies on an intermittent basis.

Paragraph (e) has been added to the final rule as a result of the inclusion of requirements for supplemental and park brake systems under paragraphs (c) and (d) of this section. This paragraph requires that the supplemental and park brake systems required by paragraphs (c) and (d) be applied when the equipment operator is not at the controls of the equipment, except during movement of disabled equipment. This requirement was developed from existing § 75.523–3(e), and requires the machine operator to set the brakes when not at the controls. However, this provision is not intended to suggest that it would be a safe practice for the operator to apply the brake and leave the machine with the engine running.

Paragraph (f) has been added to the final rule as a result of MSHA's review of the Ontario fire data, and requires self-propelled personnel-elevating work platforms be provided with a means to ensure that the parking braking system is released before the equipment can be trammed, and that the platforms be designed to ensure the brake is fully released at all times while the equipment is trammed. MSHA's review of the Ontario fire data revealed a high number of personnel-elevating vehicle fires caused by dragging brakes. The final rule applies the same requirement to personnel-elevating vehicles in this paragraph as applies to self-propelled heavy-duty nonpermissible equipment under paragraph (c)(6).

Paragraph (g) has been added to the final rule and requires that any nonpermissible equipment that discharges its exhaust directly into a return air course be provided with a power package approved under subpart F of part 7. The basis for this requirement is the possibility that the return air course may contain high levels of methane, which could be drawn into the machine's exhaust system as it cools after engine shutdown. This creates the potential for ignition of the methane by the hot surfaces of the diesel engine. As a result, the final rule requires equipment which discharges its exhaust directly into the return to be furnished with the fire and explosion protection provided by a subpart F power package. Equipment without a subpart F power package must discharge its exhaust into intake air.

Under the proposed rule all nonpermissible equipment, with the exception of a limited class of light-duty equipment, would have been required to be equipped with a power package approved under either subpart F or G of part 7. Subpart F power packages are equipped with spark arresters and flame arresters, which significantly reduce the likelihood that equipment will ignite explosive levels of methane. Because the final rule does not require power packages on nonpermissible equipment, this requirement has been added to the final rule to ensure that nonpermissible equipment that discharges it exhaust directly into a return air course, which could contain explosive levels of

methane, will not create an explosion hazard.

Paragraph (h) requires that self-propelled nonpermissible heavy-duty equipment meeting the requirements of § 75.1908(a) be provided with an automatic fire suppression system meeting the requirements of § 75.1911. Paragraph (i) requires that self-propelled nonpermissible light-duty equipment meeting the requirements of § 75.1908(b) be provided with a manual or automatic fire suppression system meeting the requirements of § 75.1911. Under the proposed rule, all nonpermissible equipment would have been required to be provided with an automatic fire suppression system.

As explained in greater detail in the preamble discussion for § 75.1911 of the final rule, some commenters supported automatic fire suppression systems for all types of equipment, while others expressed support for automatic fire suppression systems on portable or unattended equipment but were strongly opposed to requiring automatic fire suppression on all types of nonpermissible diesel-powered equipment. These commenters stated that automatic fire suppression systems were much more difficult to maintain, and were unnecessary for equipment that was attended by an equipment operator. These commenters suggested that mine operators should have the option of installing either manual or automatic systems on self-propelled equipment, stating that the equipment operator is in the best position to detect machine fires, and would be able to actuate a manual fire suppression system more easily than an automatic system. Other commenters stated that it might be difficult for an equipment operator to actuate a manual system depending on the size and type of the fire, expressing concern that an equipment operator could be overcome by the effects of a fire or explosion and not be able to manually extinguish the fire.

As discussed more fully under § 75.1911 of the preamble, the Ontario fire accident data indicates that heavy-duty diesel-powered equipment, such as the type specified in § 75.1908(a) of the final rule, presents a much greater fire hazard than light-duty equipment. Although light-duty equipment still presents some fire risk, a manually-actuated fire suppression system provides adequate protection if the equipment is attended and provided with additional safety features for protection of fuel, hydraulic, and electrical systems under this section and § 75.1910 of the final rule. As noted elsewhere in this preamble, § 75.1916(d) of the final rule requires all diesel-powered equipment to be attended while it is being operated.

An automatic fire suppression system is needed on equipment that presents a greater fire risk. Good fire fighting practice demands that a fire be suppressed as early as possible, and several reports of fire indicate that the rapid growth of a fire prevented the equipment operator from actuating the manual fire suppression system. Automatic systems respond quickly to fire without operator intervention, and are needed on equipment that operates frequently for long periods of time under high load, presenting an increased fire risk. Compressors and other non-self-propelled equipment also operate for long periods of time under high load. This results not only in high engine temperatures but also increases the possibility of mechanical failure, presenting ignition and fuel sources. To address these hazards, automatic fire suppression systems meeting the requirements of § 75.1911 of the final rule are required under paragraph (h) for self-propelled heavy-duty nonpermissible equipment, and under paragraph (j)(3) for both heavy-duty and light-duty equipment that is not self-propelled. Paragraph (i) provides that self-propelled light-duty nonpermissible equipment may be provided with either a manual or an automatic system that meets the requirements of § 75.1911.

Paragraph (j) requires nonpermissible diesel-powered equipment that is not self-propelled to be provided with features in addition to those listed in paragraph (a). These features include a means to prevent inadvertent movement of the equipment when parked, safety chains or other suitable secondary connections on equipment that is being towed, and, as discussed above, an automatic fire suppression system meeting the requirements of § 75.1911. A requirement for automatic fire suppression for non-self-propelled equipment has been retained in the final rule in recognition of the fact that non-self-propelled equipment is typically operated under load for extended periods of time, resulting in the need for automatic rather than manual fire suppression to address the additional fire risks. MSHA intends that automatic fire suppression systems be provided for those machines, such as compressors, welders, and generators, that may have some limited capacity for self-propulsion but which essentially function as portable equipment, i.e., where the equipment operator performs a function some distance from the machine while the equipment is running.

The proposal would have required a means to prevent inadvertent movement as well as safety chains or other connections for equipment being towed, but would have required a fire extinguisher instead of an automatic fire suppression system. The proposal would also have required the equipment to be provided with a sensor to monitor equipment operation that would stop the engine when an equipment malfunction would result in the creation of a hazard.

The proposed requirement for sensors to monitor the operation of portable equipment has not been adopted in the final rule. Several commenters expressed confusion as to what these devices were intended to monitor, and suggested that this requirement be eliminated because it was vague and ambiguous. The proposed requirement was intended to ensure that general safety devices supplied as original equipment features, such as low oil sensors or high temperature sensors, were maintained in proper working condition. However, MSHA has concluded that it would be extremely difficult to develop a standard that is any more specific than what was proposed that would be suitable for the variety of monitors and sensors that may be installed on equipment. In light of these circumstances, and in light of the fact that all equipment used in underground coal mines is required to be maintained in safe operating condition under existing § 75.1725, this requirement has not been adopted in the final rule.

A number of commenters recommended that additional equipment safety features be required in the final rule that were not included in the proposal. Several commenters expressed concern about limited visibility from the operator's compartment on certain types of large diesel-powered equipment. The final rule does not adopt these commenters' recommendations. Although this concern is addressed to some extent by § 75.1916 of the final rule, which requires that mines using diesel-powered equipment establish and follow standardized traffic rules, MSHA has concluded that the issue of operator equipment design and visibility should be addressed in the context of all types of equipment, not only diesel-powered equipment. Specific provisions on operator visibility have therefore not been included in the final rule.

Section 75.1910 Nonpermissible Diesel-Powered Equipment; Electrical System Design and Performance Requirements

This section addresses electrical system requirements for nonpermissible diesel-powered equipment. These requirements were proposed in § 75.1909 with other equipment safety requirements that would have applied to a limited class of nonpermissible light-duty equipment, but in the final rule are included separately in § 75.1910.

Faulty equipment electrical systems have frequently been the cause of equipment fires, and the requirements of this section address the hazards associated with these systems. Although commenters generally supported the proposed requirements, one commenter suggested that these requirements not be adopted in the final rule, because some equipment is designed for highway use and meets safety standards that have been developed by the industry over many years. The commenter asserted that changing the design of those machines' electrical systems would have an adverse impact on machine safety. MSHA is aware that electrical systems on certain types of diesel-powered equipment, such as utility vehicles, personnel carriers, and ambulances, are designed to meet safety standards for highway use. However, this final rule expands the scope of the limited class of equipment to include types of equipment that would not meet the requirements for highway use. Additionally, because of the significant hazards presented by a fire in an underground mine, additional safeguards for electrical systems on equipment employing storage batteries and integral charging systems are warranted, given the fact that a number of electrical accidents have been attributed to faults in these systems. The analysis of the Ontario fire accident data revealed that 43 percent of the fires were attributable to electrical system faults. Almost half of these were related to the engine starting and charging systems. Changes in machine design to comply with the requirements in this section are necessary to enhance safety. For these reasons, the final rule retains these special provisions.

The requirements included under this section of the final rule apply only to those electrical circuits and components associated with, or connected to, electrical systems utilizing storage batteries and integral charging systems. It should be noted, as indicated in the rule itself, that these requirements do not apply to equipment that falls within the special category of emergency equipment under § 75.1908(d) of the final rule. The requirements in this section would apply, for example, to circuits for instrument panel gages and machine lights on most equipment utilizing storage batteries and integral charging systems. Accordingly, electrical systems on nonpermissible diesel-powered equipment without storage batteries and charging systems are not governed by the requirements of this section. Additionally, the requirements of this section do not apply to electrical circuits and components on equipment that is not directly connected to or otherwise powered from a separate electrical system utilizing storage batteries and an integral charging system. Both types of systems should be designed and maintained in compliance with existing safety standards in part 75 for underground coal mines.

Several commenters suggested that the proposed electrical system requirements not be adopted in the final rule, and instead that the final rule provide that electrical systems on diesel-powered equipment comply with existing part 75 electrical safety standards for nonpermissible equipment. Some of these commenters also suggested that more performance-oriented standards be developed for electrical circuits and components associated with storage batteries and charging systems.

Performance-oriented requirements have been adopted where appropriate in the final rule to allow flexibility in design and to facilitate future development of new and improved technology. Instead of simply applying existing requirements to this equipment, as suggested by some commenters, many of the requirements of this section have been derived from existing MSHA electrical safety standards in part 75 but have been tailored to apply to diesel-powered equipment.

It should be noted that MSHA does not consider the continuous on-board recharging of the battery on this equipment, which typically power auxiliary features such as headlights, to be the type of battery-charging contemplated by existing § 75.340.

Paragraph (a) addresses overload and short circuit protection of electric circuits and components and, like the proposal, requires that such protection be provided in accordance with existing §§ 75.518 and 75.518–1. The references to the existing sections have been retained in the final rule in response to commenters' suggestions that such references would minimize confusion over what the standard requires.

Paragraphs (b) and (c) are adopted from the proposal and were developed from existing approval requirements for electrical systems on other types of diesel-powered equipment. Paragraph (b) requires that each electric conductor from the battery to the starting motor be provided with short circuit protection, and requires that the short circuit protective device be placed as near as practicable to the battery terminals. Paragraph (c) requires that each branch circuit conductor connected to the main circuit between the battery and the charging generator be provided with circuit protection. When complied with, these requirements will provide all electric conductors and circuits with circuit protection and will minimize the hazards of fire due to circuit failure.

Paragraph (d), like the proposal, requires that a main circuit-interrupting device be provided in the electrical system so that power may be disconnected from the equipment, at or near the battery terminals, in the event of an emergency. The device must be located as close as practicable to the battery terminals and be designed to operate within its electrical rating without damage. This paragraph also requires that the device not automatically reset after being actuated, and that magnetic devices be mounted in such a manner to preclude closing by gravity. This requirement reduces the possibility of a fire in the event of a short circuit protective device malfunction. The proposal would have provided that a manually operated controller, such as a rheostat, would not be acceptable as a service switch. This provision has not been included in the final rule because it is redundant and adds nothing of substance to the paragraph. Manually operated controllers are not typically used on diesel-powered equipment, and would be prohibited in any case by the language in the final rule.

Under the final rule circuit-interrupting devices must be designed not to automatically reset after being actuated. If the circuit has been interrupted it is most likely due to some fault in the system, and an automatic reset would defeat the purpose behind the device. These devices must also be operational within their electrical rating without damage, because otherwise they could self-destruct. Magnetic circuit-interrupting devices are required to be mounted in a manner that prevents gravity from closing the contacts to prevent a premature or undesirable activation of electric circuits. The requirements of this paragraph ensure proper design and installation of circuit-interrupting devices.

The proposed rule would have included the additional requirement that circuit-interrupting devices and other controls be designed so that they could be operated without opening any compartment in which they were enclosed. This proposed provision has not been adopted in the final rule, in response to commenters who advocated performance-oriented requirements. The proposal would also have required that circuit-interrupting devices meet the requirements of existing § 75.520, which simply requires that all electric equipment be provided with switches or other controls that are safely designed, constructed, and installed. This reference adds little or nothing of substance to the requirements of this paragraph, and has not been adopted in the final rule.

Paragraph (e) adopts the proposed requirement that each motor and charging generator be protected from overload by an automatic overcurrent device. This requirement is necessary to ensure proper deenergization of circuits and equipment in the event of overcurrent conditions such as arcing and motor overheating, and, when complied with, will minimize resulting fire hazards. The final rule also adopts the proposed provision that one device will be acceptable when two motors of the same rating operate simultaneously and perform virtually the same duty.

The requirements of paragraph (f), like the proposal, address conductor size and capacity. Proper selection of circuit conductors of adequate size and current carrying capacity and with insulation compatible with the circuit voltage depends on the environmental conditions under which the conductors will be used. Conductor size and capacity are also important in minimizing overload and short circuit conditions which could cause a fire. The final rule adopts the proposed requirements that each ungrounded conductor have insulation compatible with the impressed voltage, and that insulation materials be resistant to deterioration from engine heat and oil. The final rule, like the proposal, also requires that electric conductors meet the requirements of existing §§ 75.513 and 75.513–1, except for electrical conductors for starting motors, which must only comply with the performance-oriented requirements of § 75.513. Existing § 75.513 provides that all electric conductors shall be sufficient in size and have adequate current carrying capacity and be of such construction that a rise in temperature resulting from normal operation will not damage the insulating material. Existing § 75.513–1 provides that an electric conductor is not of sufficient size to have adequate current carrying capacity if it is smaller than provided for in the National Electric Code of 1968.

Existing §§ 75.513 and 75.513–1 were developed for electrical equipment used in outby locations, but they are also suitable for application to all nonpermissible diesel- powered equipment. Greater flexibility is provided for electric conductors for starting motors, which are not required to meet the size and carrying capacity requirements under § 75.513–1, but must only comply with the performance requirements of § 75.513. This is because the conductor size requirements in the 1968 National Electric Code are determined based on the motor running at maximum load, with no allowance for the type of duty. The conductor sizes specified in the Code would therefore not be appropriate for starting motors, which typically run for only a very short period of time.

Several commenters objected to the requirement in the proposed rule that conductors for equipment or accessories added to a vehicle's electrical system after manufacture not be smaller than No. 14 AWG in size, stating that some components were not readily available with wire sizes compatible with this requirement. In response to this comment and in light of the requirements that have been adopted in the final rule, which will provide adequate protection, the proposed size restriction on certain conductors is not adopted in the final rule.

Since damaged or defective conductors or components may present potential fire hazards, paragraphs (g) and (h) address the protection of electric circuits and components. Paragraph (g), like the proposal, requires all wiring to have adequate mechanical protection to prevent damage to the cable that might result in short circuits. Paragraph (h) adopts the proposed requirement that sharp edges and corners be removed at all points where there is a possibility for damaging wires, cables, or conduits by cutting or abrasion. The insulation of the cables within a battery box is also required to be protected against abrasion. These paragraphs ensure that circuits are physically protected and secured from movement or displacement caused by vibration, as well as from cutting or abrasion. The proposed rule would have included the additional requirements that wiring have adequate electrical protection to prevent cable damage, and that wiring be installed in accordance with existing § 75.515, as applicable. The reference to electrical protection in the proposal was determined to be redundant, and has not been adopted in the final rule. The reference to existing § 75.515 in the proposal has also not been adopted in the final rule, because it simply restates requirements already included in the final rule.

Paragraph (i) requires electrical connections and splices to be electrically and mechanically efficient, in addition to having adequate insulating properties. Insulating material would be required in applications where space is limited and where the possibility exists of arcs striking metal walls or parts. These precautions minimize fire hazards from improper or loose connections and splices as well as insufficient electrical clearances, which could cause a fire due to conductor overheating or electrical arcing. In response to comments, specific references to bolted connectors and to existing § 75.514 have been deleted and replaced with more performance-oriented requirements.

Paragraph (j) of the final rule, like the proposal, requires storage batteries to be secured in place to prevent undue movement and protected from external damage. Batteries not protected from damage by their location on the equipment are required to be housed in a battery box.

Paragraphs (k) through (o) of the final rule set forth requirements for battery box construction, and are adopted from the proposal with slight revision. These requirements provide for a substantially constructed battery enclosure and address battery insulation, ventilation, and chemical reaction from electrolyte. A number of commenters suggested that more performance-oriented requirements be adopted for battery box construction. However, the proposed design specifications have been retained in the final rule because they set forth the minimum construction requirements needed to protect a battery from external damage. One commenter related an incident where a battery case had deteriorated, resulting in arcing and sparking between the battery terminal and the frame of the machine. Other reports of fires from the Ontario fire accident data indicate that a number of fires had been caused by batteries that were not secured in place or adequately protected from external damage. The minimum design and construction requirements for battery boxes in the final rule are necessary to reduce these types of hazards.

Paragraph (k) provides that the battery box, including the cover, must be constructed of steel with a minimum thickness of ⅛ inch, or of a material other than steel that provides equivalent strength. One commenter specifically

cited the proposed 3/16-inch thickness requirement as an example of an unnecessary design requirement. This requirement has been changed to 1/8-inch minimum thickness to conform to existing part 7 requirements for battery boxes containing batteries no greater than 1,000 pounds. Thinner battery box cross sections would not provide adequate protection for the battery and could result in a fire or explosion.

Paragraph (l) provides that battery-box covers must be lined with a flame-resistant insulating material permanently attached to the underside of the cover, unless equivalent protection is provided. Battery-box covers must also be provided with a means for securing them in a closed position. At least 1/2-inch of air space must be provided between the underside of the cover and the top of the battery, including terminals. Paragraph (m) requires battery boxes to be provided with ventilation openings to prevent the accumulation of flammable or toxic gases or vapors within the battery box. The size and locations of openings for ventilation must prevent direct access to battery terminals. Paragraph (n) requires the battery to be insulated from the battery-box walls and supported on insulating materials. Insulating materials that may be subject to chemical reaction with electrolyte must be treated to resist such action. Finally, paragraph (o) requires drainage holes in the bottom of each battery box.

Stationary unattended diesel-powered equipment. The Diesel Advisory Committee recommended that stationary unattended diesel-powered equipment be prohibited where permissible electric equipment is required, and that stationary unattended equipment used elsewhere in the mine be provided with the fire prevention features required for electrical installations and mobile diesel-powered equipment. The Committee recommended that stationary unattended equipment be equipped with specific machine features, such as surface temperature controls, an automatically and manually actuated fire suppression system, an engine shutdown device, and a means to shut down the engine from the surface. The Committee also recommended that stationary unattended equipment be housed in a fireproof enclosure ventilated to a return air course.

Section 75.1910 of the proposed rule incorporated the recommendations of the Advisory Committee for stationary unattended equipment. Specifically, proposed § 75.1910 would have prohibited stationary unattended diesel-powered equipment in areas of the mine where permissible electric equipment was required or in the primary escapeway. Stationary unattended equipment located in other areas of the mine would have been required to have a diesel power package approved under subpart F or G of part 7. Additional safety features were proposed for this equipment, including fuel system requirements, limitations on storage of the equipment fuel supply, and a methane monitor that would shut down the engine in the presence of 1.0 percent concentration of methane.

A number of commenters were concerned that the proposed rule dealt with stationary unattended diesel-powered equipment differently than existing standards addressed unattended electrical equipment, and imposed unnecessary restrictions. These commenters stated that it was excessive to require approved power packages on equipment when the equipment is already housed in a noncombustible enclosure, vented to a return air course, protected by an automatic fire suppression system, and equipped with a device that shuts down the equipment and sounds an alarm at an attended surface location. Several commenters stated that unattended electric equipment, which they believed presented similar ignition sources, was not required to have methane monitors, and that such monitors were not necessary, given the outby locations where stationary nonpermissible equipment would operate.

Other commenters favored a complete prohibition of unattended diesel equipment in underground coal mines, stating that diesel equipment presented too great a fire hazard to allow it to be operated unattended, even with the imposition of rigid safety requirements. One commenter referred to the 1984 Wilberg Mine disaster, where a fire started by an unattended electrical compressor killed 27 miners. In the alternative, these commenters recommended that extensive additional requirements be imposed on stationary unattended equipment, including a requirement that the equipment be permissible, and that the enclosure housing the equipment meet a 2-hour fire resistance test.

One commenter stated that there should be clarification of what constitutes ''stationary'' versus ''portable'' equipment. The commenter pointed out that some types of equipment, such as compressors, are portable because they are capable of being transported by rail or otherwise carried, but that the equipment can also be placed in a remote location and operated there for an indefinite period of time.

In considering these comments, MSHA reviewed data to determine the types of equipment that would be affected by the proposed requirements for stationary unattended equipment. This review revealed that there were approximately 200 pieces of equipment that were currently being operated either as stationary unattended equipment or as portable attended equipment. Equipment such as air compressors, generators, mine sealant machines, hydraulic power units, rock dusters, water spray units, and welders fell into this category. Water spray units are used to wash mining equipment; mine sealant machines apply sealants to stoppings or mine surfaces; hydraulic power units are used to operate certain special purpose tools; rock dusters are used to apply rock dust to mine surfaces; and diesel-powered welders are used where electric power is not readily available. An operator must be present to perform the main function of all of these types of equipment, i.e., welding, rock dusting, etc.

MSHA's review also revealed that diesel-powered generators are typically used to provide electrical power to move equipment with electric motors from place to place in the mine. An equipment operator is also in attendance when this type of equipment is being used. Finally, MSHA's review also indicated that diesel-powered compressors are used in a manner similar to hydraulic power units, with an operator in attendance, to provide a source of compressed air to operate tools such as pneumatic hammers and drills.

From this review, MSHA has concluded that diesel-powered equipment is not commonly operated unattended in a permanent location, but instead is operated with a person in close proximity. The final rule includes a definition of what constitutes attended diesel-powered equipment in § 75.1908, which provides that the equipment must either be operated by a miner, or located within 500 feet of a job site where a miner is located. Essentially all of the diesel-powered equipment currently operated in underground coal mines is ''attended'' under the final rule's definition. In light of this determination, and also in light of the serious concerns expressed by some commenters about the possible fire hazards presented by unattended diesel-powered equipment operating underground, § 75.1916(d) of the final rule prohibits the operation of unattended diesel-powered equipment in underground coal mines.

Consequently, the proposed requirements addressing the operation of stationary unattended diesel-powered equipment are not adopted in the final rule.

As a result of the final rule's prohibition against operation of unattended diesel-powered equipment in underground coal mines, conforming amendments are necessary to several existing standards, primarily to delete unnecessary references to unattended diesel-powered equipment. Existing § 75.360 lists the locations where preshift examiners must examine for hazardous conditions, test for methane and oxygen deficiency, and determine if the air is moving in the proper direction. The final rule deletes from these locations the reference in § 75.360(b)(7) to ''where unattended diesel equipment is to operate.'' Additionally, existing § 75.380(f)(3)(i) included a prohibition against operation in the primary escapeway of unattended diesel equipment without an automatic fire suppression system. This reference is deleted by the final rule.

Finally, existing § 75.344 deals with the use of air compressors underground, including unattended diesel compressors. The final ventilation rule that was published in October 1989 made clear that the application of the requirements of § 75.344 to diesel compressors would be removed when the final rule for diesel equipment was promulgated. [54 FR 40950]. The reference to diesel compressors in paragraph (d) of § 75.344 is therefore removed by the final rule.

Section 75.1911—Fire Suppression Systems For Diesel-Powered Equipment And Fuel Transportation Units

Section 75.1911 of the final rule establishes requirements for the design, installation, and maintenance of fire suppression systems used on diesel-powered equipment and fuel transportation units in underground coal mines. Under the final rule, both permissible and nonpermissible diesel-powered equipment is required to be equipped with fire suppression systems. The requirement for installation of fire suppression systems on permissible diesel-powered equipment is contained in the final rule at § 75.1907(b)(2),and for nonpermissible equipment at § 75.1909 (h), (i), and (j)(3). Nonpermissible diesel-powered equipment typically includes scoops, personnel carriers, and pickup trucks.

The Diesel Advisory Committee recommended that fire suppression systems be required on certain types of diesel-powered equipment, in addition to surface temperature controls, to address fire hazards created by other machine system malfunctions such as brake components overheating, severing of a fuel line or hydraulic line, and electric component short-circuiting. The Committee made a number of recommendations regarding the application of fire suppression systems to specific types of equipment such as nonpermissible equipment, limited class equipment, and stationary equipment. The proposed rule included design, installation and maintenance requirements for fire suppression systems on diesel-powered equipment and fuel transportation units. These requirements would have been applicable to approved equipment, limited class equipment, and fuel transportation units, both self-propelled and towed.

Commenters to the proposed rule generally accepted the need for fire suppression systems on diesel-powered equipment operated in underground coal mines. However, comments varied on what the requirements for fire suppression systems should be. Some commenters recommended that only manufacturer's requirements for design, installation and maintenance be used. Other commenters suggested a more detailed approach and recommended that the final rule outline specific requirements for fire suppression systems.

Fire suppression systems are necessary on diesel-powered equipment, including fuel transportation units, because of the numerous fuel sources, including diesel fuel, hydraulic fluid, and combustible material, and several potential ignition sources, such as hot exhaust components, dragging brakes, and electrical wiring on this type of equipment. Accident reports describe machine fires caused by hot exhaust components, dragging brakes and shorted electrical components igniting diesel fuel, hydraulic fluid, brake fluid, lube oil, and other combustible materials, such as electrical insulating material.

Fire suppression systems are designed to extinguish fires quickly, in their incipient stage, and to reach all locations where a fire may occur. This is important for diesel-powered equipment because a fire must be extinguished quickly before fuel sources can further propagate a fire. For example, if a fire is not extinguished at an early stage, leaking diesel fuel or hydraulic fluid can fuel a fire and result in an increase in the intensity and size of the fire. Also, promptly extinguishing a fire prevents reignition through the contact of hot surfaces created by the fire with leaked or spilled diesel fuel or hydraulic fluid. Fixed fire suppression systems also offer two advantages over portable fire extinguishers: fast attack and application of the suppressant to difficult-to-reach areas on and under diesel machines where fires may occur.

An automatic fire suppression system uses a supplemental detection device to sense an early warning of a fire. The fire detection system, which is generally actuated by either smoke or heat, automatically sends a signal to the system for the discharge of suppressant agent. Manual fire suppression systems require a person to actuate the fire suppression system by either pushing a button or throwing a switch to discharge the fire suppressant agent to the hazard. Both automatic and manual fire suppression systems utilize a network of piping and nozzles to allow suppressant agent to be released and distributed directly at a predetermined fire hazard.

Under the final rule, fire suppression systems are required to provide fire suppression and, if an automatic system is installed, fire detection for the engine, transmission, hydraulic pumps and tanks, fuel tanks, exposed brake units, air compressors, battery areas and other areas as necessary. The final rule also requires that automatic fire suppression systems include audible and visual alarms to warn of fires or system faults and automatic engine shutdown in the event of a fire. In addition, the final rule requires all fire suppression systems to be tested and maintained in accordance with manufacturer's recommendations. Finally, the rule establishes certain recordkeeping requirements for faulty fire suppression systems that are found during inspection and testing.

Paragraph (a) of this section of the final rule provides that the fire suppression system required by §§ 75.1907 and 75.1909 must be a multipurpose dry chemical type (ABC) fire suppression system listed or approved by a nationally recognized independent testing laboratory and appropriate for installation on diesel-powered equipment and fuel transportation units.

The proposed rule would have required an automatic multipurpose dry powder type fire suppression system suitable for its intended application and listed or approved by a nationally recognized independent testing laboratory on diesel-powered equipment and portable diesel-powered equipment and fuel transportation units. The proposal would have further established fire suppression requirements for approved equipment, limited class equipment, and fuel transportation units, both self-propelled and towed.

Commenters expressed support for automatic fire suppression systems on portable or unattended diesel-powered equipment. A number of commenters, however, stated that automatic fire suppression systems are not needed on self-propelled diesel-powered equipment, because this type of equipment is attended by an equipment operator. These commenters suggested that mine operators should have the option of providing either manual or automatic fire suppression systems on self-propelled diesel-powered equipment, stating that the equipment operator is in the best position to detect incipient fires on the machine and is able to actuate a manual fire suppression system more easily than an automatic system. Some commenters stated that automatic fire suppression systems are not necessary on mobile diesel-powered equipment because this type of equipment will already be required to have fire protection and shutdown features. Commenters also stated that automatic systems can require extra maintenance and are susceptible to vibration, which can cause them to discharge unexpectedly. In addition, commenters stated that automatic fire suppression systems should not be required on vehicles with surface temperature controls, such as permissible vehicles, because compatible permissible systems were not available at the time of the proposal.

Other commenters supported the proposal for automatic fire suppression systems on all types of diesel-powered equipment. In testimony before the Diesel Advisory Committee, equipment manufacturers and mine operators endorsed the use of automatic fire suppression systems on several types of diesel-powered equipment and gave examples of current applications. Other commenters to the proposal observed that it might be difficult for an equipment operator to actuate a manual system depending on the type and size of a fire. These commenters expressed concern that an equipment operator could be overcome by the effects of a fire or explosion and not be able to manually extinguish the fire. Some commenters also expressed concern that a manually-actuated system would be ineffective for a fire that started after the equipment had been shut off and the equipment operator had left the area.

Paragraph (a) of this section of the final rule does not adopt the proposed requirement for installation of an automatic fire suppression system on all mobile diesel-powered equipment. Instead, the final rule establishes requirements for both manual and automatic fire suppression systems. The type of fire suppression system required for installation on diesel-powered equipment is specified in § 75.1907(b)(2) for permissible equipment, and § 75.1909 (h), (i), and (j)(3) for nonpermissible equipment.

The Ontario fire accident data indicated that heavy-duty diesel-powered equipment of the type defined in the final rule at § 75.1908(a) presents a much greater fire hazard than light-duty equipment defined under the final rule at § 75.1908(b). The data showed that heavy-duty diesel-powered equipment, which includes equipment that cuts or moves rock or coal, equipment that performs drilling or bolting functions, and fuel transportation units, had 247 fires (85 percent) of the total number of fires. Heavy-duty equipment frequently works under load and can develop large areas of hot engine surfaces. This equipment is prone to mechanical breakdown, especially hydraulic hose and electrical cable failure, creating a serious risk that the equipment will develop both an ignition source and provide a source of fuel for a fire.

By contrast, light-duty diesel-powered equipment, which under the final rule includes supply vehicles, maintenance vehicles, personnel carriers, and other equipment not used to move rock or coal, accounted for 43 (15 percent) of the total number of fires. Light-duty equipment is not used in the actual mining process and is generally not worked very hard and typically used only intermittently during a shift. While over a third of the fires on heavy-duty equipment were started by hot engine surfaces, fewer than 10 percent of the fires on light-duty equipment were started by hot engine surfaces. Fires related to the electrical system accounted for 60 percent of the light-duty equipment fires. Electrical fires tend to smolder and provide more time for action to be taken to extinguish the fires than do diesel fires.

Although light-duty equipment still poses a fire risk, this risk can be adequately addressed by fire suppression systems which take into account the manner in which light-duty equipment is used and the types of fires that typically occur on it. The final rule, therefore, does not adopt the proposal that automatic fire suppression systems be installed on all diesel machines.

A manually-actuated fire suppression system provides adequate protection on light-duty self-propelled equipment. This type of equipment is attended by its operator at all times that it is operating as required by § 75.1916(d) of the final rule. As discussed by several commenters to the proposal, it has been their experience that a well-maintained manually-actuated fire suppression system is appropriate if the equipment is attended. These commenters stated that manually-actuated fire suppression systems are adequate in conjunction with additional protective features for fuel, hydraulic, and electrical systems, to provide fire protection on outby diesel-powered equipment. In addition to a manual fire suppression system, protective features for fuel, hydraulic, and electrical systems are required on both heavy-duty and light-duty nonpermissible equipment under §§ 75.1909 and 75.1910 of the final rule.

Automatic fire suppression systems are necessary on equipment that poses a higher fire risk. This includes heavy-duty equipment, which presents an increased fire hazard as discussed above. It also includes equipment for which the operator is not immediately present at the controls of the machine at all times it is operated, such as compressors. Good fire fighting practice requires that the fire be attacked as early as possible. Further, several reports indicate that the rapid growth of fire prevented the equipment operator from actuating the manual fire suppression system. Automatic systems provide a fast response without operator intervention. Compressors and other non-self-propelled equipment frequently operate for long periods of time under high load. This results in sustained high engine surface temperatures, which can provide an ignition source for a fire and increase the likelihood of a a mechanical failure providing a fuel source for a fire. Also, the individual operating the compressor may be some distance from the machine, and would not be able to promptly actuate the fire suppression system. To address these hazards, the final rule adopts the proposed requirement for automatic fire suppression systems for heavy-duty and non-self-propelled equipment.

One commenter to the proposal stated that the requirement in paragraph (a) that the ''system be suitable for the intended application'' was ambiguous and could be subject to different interpretations. This commenter stated that the term ''suitable'' could refer to a system that is suitable for a particular type of fire (class B flammable or combustible liquid fire) or it could mean that the system has a sufficient capacity to extinguish a fire on a particular piece of equipment. Other commenters recommended that the final rule specify the capacity of the fire suppression system.

The final rule responds to commenters' concerns by requiring that

fire suppression systems be multipurpose dry chemical type (ABC) fire suppression systems listed or approved by a nationally recognized independent testing laboratory, and appropriate for installation on diesel-powered equipment. The final rule does not adopt the language ''suitable for the intended application.''

The capacity and suitability of fire suppression systems for protecting against specific fire hazards are specified as part of the listing or approval by the nationally recognized independent testing laboratory. The nationally recognized independent testing laboratory system listing or approval does not necessarily designate the system for a specific type of equipment, such as fuel transportation units or even diesel-powered equipment. Instead, the listing or approval uses a more general description such as mobile mining equipment or vehicle protection. Listing or approval by a nationally recognized independent testing laboratory ensures that a fire suppression system is properly designed for a particular type of fire protection hazard by putting the system through a series of specific performance tests. The system must also meet rigid design requirements in order to gain approval or listing.

Fire suppression systems should be installed by a qualified individual following the installation and maintenance instructions in the system manufacturer's installation manual. The sizing of a fire suppression system is dependent on the number of nozzles needed to adequately cover all of the fire hazard areas that have been identified. The number of dry chemical canisters required will be proportional to the number of hazard areas that must be covered by the nozzles. This information can be obtained from the installation manual that is part of the listing or approval documentation. Other installation considerations, such as proper location and guarding of nozzles and other system components to prevent damage, are addressed in the system's installation manual. In addition to the installation requirements in the manual, follow-up maintenance and inspection procedures are provided.

Also modified in this section from the proposal is the term ''chemical'' replacing the term ''powder'' and the addition of the letter references ''ABC'' for the three classes of fire. These modifications are made in response to commenters' requests for clarification and to incorporate more appropriate terminology.

A multipurpose dry chemical type system is capable of suppressing the three classes (ABC) of fires on diesel-powered equipment. A class A fire refers to fires of combustible solid materials such as paper, rubber, textiles, and cloth, and would typically involve such items as tires, hosing or seats on diesel-powered equipment. A class B fire on diesel-powered equipment would involve diesel fuel. Class C fires involve electrical components, and could include such components as lights, pumps, and components of the control panel on diesel-powered equipment. A multipurpose dry chemical type agent is specifically designed to extinguish ABC class fires.

Paragraph (a)(1) of the final rule, like the proposal, requires that the fire suppression system be installed in accordance with the manufacturer's specifications and the limitations of the nationally recognized independent testing laboratory listing or approval. Commenters generally expressed support for this aspect of the proposal. This requirement ensures that the system is installed within the limits defined by the listing or approval organization and as specified by the fire suppression system manufacturer. Since the system already is performance-tested to a specific standard and in certain configurations, it must be installed within these parameters to be effective.

Paragraph (a)(2) adopts the requirement from the proposal that the fire suppression system be installed in a protected location or guarded to minimize physical damage from routine vehicle operations. No specific comments were received on this aspect of the proposal. In order for fire suppression systems to work properly, they must not be subjected to damage from the mining environment. Damage to any part of the fire suppression system can result in a malfunction of the entire system and in the system not responding to a fire. For example, a rock fall can pinch a hose or crush a sensor and create faults that can disable either the entire system or a portion of the system that covers a certain area of the machine.

Paragraph (a)(3), like the proposal, requires that the suppressant agent distribution tubing or piping be secured and protected against damage, including pinching, crimping, stretching, abrasion, and corrosion, and that the discharge nozzles be positioned and aimed for maximum fire suppression effectiveness in the protected areas. No specific comments were received on this aspect of the proposal. During the normal operation of diesel-powered equipment in the confined space of a coal mine, a fire suppression system can become damaged from collision or nozzles positioned at a specific predetermined location can be redirected away from a fire hazard.

Paragraph (a)(4), like the proposal, requires that fire suppression nozzles also be protected against the entrance of foreign materials. No specific comments were received on this aspect of the proposal. The openings in the nozzles used on multipurpose dry chemical fire suppression systems can be as small as ⅛ of an inch. If material such as mud, coal dust, or rock dust enters the nozzle, it can prevent the chemical agent from discharging entirely, or alter the pattern and coverage of fire suppressant.

Paragraph (b) of the final rule requires fire suppression and, if the system is automatic, fire detection for certain coverage areas on diesel-powered equipment. Under the final rule, the coverage areas include the engine (including the starter), transmission, hydraulic pumps and tanks, fuel tanks, exposed brake units, air compressors and battery areas on diesel-powered equipment and electric panels or controls used on fuel transportation units. This requirement ensures that fire detection and fire suppression are provided with coverage for key areas of diesel-powered equipment and fuel transportation units.

Although the listing or approval generally describes areas on equipment that pose a fire hazard, it does not specifically identify which hazards must be covered by fire suppression. The final rule's requirement for specific fire suppression coverage for certain areas on diesel-powered equipment is supported by the Ontario fire data. The data showed that engine fires accounted for 99 (34 percent) of the total number of fires on diesel-powered equipment. Included in engine fires were 10 compressor fires, 27 hydraulic system fires, 11 transmission fires, and 7 fuel tank fires. The Ontario fire data also indicate 32 battery fires and 55 brake fires.

The scope of paragraph (b) is expanded to include the starting mechanism on diesel-powered equipment. This responds to commenters' recommendations that foreign fire data be evaluated to establish criteria for fire protection on diesel-powered equipment. The Ontario fire accident data indicate that starters, starter solenoids, and the wiring associated with these components present a fire hazard. The data showed 21 (17 percent) of the electrical fires on self-propelled diesel-powered equipment were caused by starter circuits. Also, the proposal included the engine compartment as an area to be

covered by the fire suppression system. The specific reference to the starter area in the final rule clarifies that the starter area of the engine compartment be covered by the fire suppression system.

The proposed rule specified fire suppression system coverage areas for various types of limited class equipment. Because of the different fire hazards presented by the various types of equipment listed in the proposal, separate provisions in proposed paragraph (b)(1) were included. In the final rule the limited class category of light-duty equipment is expanded to include a range of equipment types, beyond the types defined in the proposal, and the requirements for coverage areas have been combined.

Proposed paragraph (b)(2) has not been adopted in the final rule to the extent that it would have specified coverage areas around fuel transportation units in response to commenters' statements that fuel tanks by themselves do not constitute a fire hazard, and only need coverage if an associated ignition source is present. Proposed paragraph (b)(3), which would have required fire suppression coverage for fuel containers and electric panels or controls used during fuel transfer operations on fuel transportation units, has not been adopted because the term ''container'' is no longer used in the final rule. The phrase ''during fuel transfer operations'' was not adopted from the proposal to eliminate the inference that only electric panels or controls used during fuel transfer operations must have coverage. Under the final rule, electrical components installed on fuel transportation units must be covered by fire suppression systems. However, a vehicle's instrument panel located in the operator's compartment of the machine would not be considered ''electrical panels and controls.'' Expelling fire suppressant in the operator's compartment would create other hazards for the equipment operator such as a cloud of fire suppressant which could limit visibility.

Paragraph (c), like the proposal, requires that automatic fire suppression systems include audible and visual alarms to warn of fires or system faults. No specific comments were received on this aspect of the proposed rule. This requirement provides a means for immediate notification of the equipment operator, both audibly and visually, when the system detects a fire on the machine or a problem with the fire detection device. The audible and visual indication of fire detection can alert the equipment operator of the imminent discharge of the chemical agent and the engine shutdown required by paragraph (d).

Paragraph (d) of the final rule adopts the proposed requirement that the fire suppression system provide for automatic engine shutdown. The final rule also provides that if the fire suppression system is automatic, engine shutdown and discharge of suppressant agent may be delayed for a maximum of 15 seconds after the fire is detected by the system. Commenters expressed support for this aspect of the proposed rule.

The engine shutdown requirement is intended to prevent an engine from continuing to run once the system has been actuated, either automatically or manually. This will prevent the engine from pumping diesel fuel or hydraulic fluid through a leaking fuel line or hydraulic hose, fueling the fire that the fire suppression system is attempting to extinguish. Since fire suppression systems are designed to suppress fires in their incipient stages, the contribution of additional fuel to the fire may render the system ineffective. The Ontario accident data included a number of machine fires where the engine continued to feed the fire with diesel fuel or hydraulic fluid, reducing the effectiveness of the system's ability to suppress the fire. In addition, the engine shutdown feature prevents the engine cooling fan from dispersing the fire suppressant agent before it extinguishes the fire. A maximum of 15 seconds delay between the time of fire detection and actuation provides a limited period of time for the equipment operator to stop and exit the machine before the machine engine shuts down.

Paragraph (e) of the final rule adopts the proposed requirement that the fire suppression system be operated by at least two manual actuators. One actuator must be located on each side of the equipment, and if the equipment is provided with an operator's compartment, one actuator must be located in the compartment within easy reach of the equipment operator.

Several commenters expressed the opinion that two manual actuators were unnecessary on small units of diesel equipment, such as tractors, when the second actuator would have to be installed in close proximity to the engine. Another commenter urged that actuators be separated from each other by a means of a check valve or other device to allow the system to operate even if there is an open line in the actuation circuit.

Two actuators for a fire suppression system are important to afford ample opportunity to initiate the system, even on small units of diesel-powered equipment. For example, if only one actuator were located on the side of a piece of equipment, the equipment operator might be unable to access the actuator due to the confined spaces in an underground coal mine, or because the fire ignited in the same location as the actuator. The final rule requirement for two manual actuators is also consistent with existing § 75.1107 for dry chemical fire suppression systems for electric equipment.

The final rule does not include a requirement for a check valve between the actuators for fire suppression systems. This is part of the system design and is more appropriately addressed by the system manufacturer and the listing or approving nationally recognized independent testing laboratory.

Paragraph (f) adopts the proposed requirement that the fire suppression system must remain operative in the event of engine shutdown, equipment electrical system failure, or failure of any other equipment system. No specific comments were received on this aspect of the proposed rule. This requirement is intended to ensure that the functioning of the system is not dependent on any external power source, such as an engine-driven alternator, vehicle battery, or the proper operation of any other machine system.

Paragraph (g), like the proposal, requires that the electrical components of each fire suppression system installed on diesel-powered equipment used where permissible electric equipment is required be permissible or intrinsically safe, and that such components be maintained in permissible or intrinsically safe condition. This provision requires that automatic fire suppression systems be certified or approved by MSHA under part 18.

A number of commenters to the proposal stated that intrinsically safe vehicle-type automatic fire suppression systems were not available. Currently, however, two fire suppression system manufacturers have obtained approval under part 18 for their automatic fire suppression systems.

Paragraph (h) adopts the requirement from the proposal that electrically operated detection and actuation circuits be monitored and provided with status indicators showing power and circuit continuity. If the system is not electrically operated, a means must be provided to indicate the functional readiness status of the detection system. These features notify the equipment operator or maintenance person of the functional readiness status of both the detection and actuation circuit and the power source. No specific comments

were received on this aspect of the proposed rule.

Currently at least one manufacturer is marketing an automatic fire suppression system with these electrical features on both permissible and nonpermissible systems. There is also an automatic system which is not electrically operated and employs a pressurized cylinder to disperse the suppressant. A pressure gauge on the cylinder is considered sufficient to indicate the condition of the system.

Paragraph (i) requires that each fire suppression system be tested and maintained in accordance with the manufacturer's recommended inspection and maintenance program and as required by the nationally recognized independent testing laboratory listing or approval. It also requires fire suppression systems to be visually inspected at least once each week by a person trained to make such inspections.

The proposed rule would have required each fire suppression device to be visually inspected at the same interval by a person qualified to make such inspections. The proposal also would have required that each fire suppression device be tested and maintained in accordance with applicable requirements in § 75.1100.

Commenters to the proposal generally expressed support for required maintenance of fire suppression systems installed on diesel-powered equipment. Some commenters, however, recommended that a maintenance program specifically designed for fire suppression systems be developed at each mine. One commenter stated that a visual inspection of fire suppression systems on diesel-powered equipment would not be adequate and recommended that fire suppression systems be maintained in accordance with the manufacturer's guidelines by either outside entities qualified by the equipment manufacturer or through a program to qualify individuals at the mine. Another commenter to the proposal recommended that the manufacturer's inspection and maintenance program be referenced in lieu of the requirements in § 75.1100. One commenter stated that automatic fire suppression systems are more difficult to maintain than manual systems, but that both types of systems should be inspected monthly and maintained semi-annually as a minimum. Another commenter expressed concern that certain critical internal components of a fire suppression system could be checked simply by a visual inspection.

Under the final rule, the weekly visual inspection is not intended to be an in-depth inspection. The weekly visual inspection is intended to be a quick check to determine if defects, such as disconnected hose lines or altered nozzles, are readily apparent. The in-depth inspection takes place as part of the manufacturer's recommended testing and inspection procedure also required under the final rule. Fire suppression system manufacturers are most familiar with the design and operation of their systems and are best able to identify the components that need maintenance as well as the type and frequency of maintenance. Adequate maintenance is essential because of the importance of these systems in suppressing machine fires. Maintenance and testing requirements for fire suppression systems are included in the final rule in addition to the requirement for a weekly visual inspection.

The manufacturer's inspection and maintenance procedures are typically spelled out in great detail in the manufacturer's manual and, depending on the operating environment, include the recommended inspection intervals. In addition, these inspection and maintenance procedures are evaluated as part of the system's approval or listing by a nationally recognized independent testing laboratory.

The requirement in this paragraph is identical to the requirement in existing § 75.1107–16(a). However, the fire suppression system requirements in §§ 75.1107–3 through 75.1107–16 cannot be directly applied to diesel-powered equipment for several reasons. Any modification of these existing requirements by inserting the term ''diesel-powered'' in the regulatory language would result in an extremely confusing regulation. Also, the fire hazards presented by diesel-powered equipment are different from those on electric-powered equipment, due to the close proximity of large quantities of hydraulic oils and fuels to the heated diesel engine exhaust. The single modification made to this paragraph was replacing the term ''device'' with the term ''system''. This was done because MSHA intends that the whole system be inspected and not just individual components of the system.

Although automatic systems have additional components that must be inspected and maintained, properly trained maintenance personnel should have little difficulty satisfying these requirements. It is anticipated that the training of the personnel assigned to perform the testing and maintenance of fire suppression systems will be provided by the system manufacturer or distributor. Additionally, automatic fire suppression systems under the final rule are required to have a status monitoring feature to tell the equipment operator or maintenance personnel that a problem exists.

Section 75.1915(b)(3)(iv) of the final rule requires that the training and qualification program for qualified persons working on diesel equipment address tests and maintenance of fire suppression systems. The qualified person conducting maintenance on fire suppression systems on diesel-powered equipment should have sufficient familiarity with the elements of the fire suppression system. A person ''trained'' to perform inspections and tests required by paragraph (i) of this section of the final rule is not required to be a person qualified under § 75.1915. However, the final rule intends that the person performing tests and inspections of fire suppression systems have sufficient knowledge to determine whether a fire suppression system is functioning properly. MSHA anticipates that since fire suppression systems are common to both electric and diesel equipment, the mine operator will work with either the fire suppression system manufacturer or distributor to ensure that personnel responsible for the maintenance of fire suppression systems are adequately trained.

Paragraphs (j) of the final rule establishes recordkeeping requirements which address the inspection and maintenance requirements for fire suppression systems set forth in paragraph (i). Paragraph (j) of the final rule requires that persons performing inspections and tests of fire suppression systems record results of tests and inspections only when a fire suppression system does not meet the installation or maintenance requirements of this section. Under these circumstances, the person performing the inspection or test is required to record the equipment on which the fire suppression system did not meet the installation or maintenance requirements of this section, the defect found, and the corrective action taken. The final rule also requires that these records be kept either manually or electronically in a secured manner that is not susceptible to alteration. Paragraph (j)(3) requires that records be maintained at a surface location at the mine for one year and made available for inspection by an authorized representative of the Secretary and miners' representatives.

The proposal would have required that a record be kept of all inspections and tests of fire suppression systems

and maintained at an appropriate location for each fire suppression device. One commenter to the proposal recommended that, in order to provide adequate maintenance of fire suppression systems, interested parties be allowed to view the results of visual inspections recorded in approved books. Another commenter recommended that records of inspections be maintained on the surface by the operator so that they would be available for MSHA verification. This commenter stated that maintaining separate records for inspections of fire suppression systems is an unnecessary burden for the mine operator. This commenter stated that records kept on computers, as pre-shift examinations and by normal maintenance inspections, would be adequate for documenting the inspections conducted on fire suppression systems.

Office of Management and Budget guidance comments directed MSHA to reexamine the recordkeeping requirements in the proposal and recommended that the final rule require paperwork that was the least burdensome necessary. MSHA has done so, and the final rule does not adopt the proposal that all fire suppression system test and maintenance results be recorded. In response to commenters and consistent with other provisions of the final rule, paragraph (j) requires that records of inspections and tests be made only when a fire suppression system does not meet the installation or maintenance requirements of this section. This requirement is important because if a fire suppression system does not meet the installation or maintenance requirements of this section, the defect could be sufficiently serious to cause the system to fail in the event of a fire. This requirement is intended to ensure that records are maintained and made available to interested parties when a defect is found, and that the appropriate level of mine management is made aware of defects requiring corrective action.

The final rule does not specify a particular way of recording the test and maintenance data, only that the records be located at the surface of the mine. The records of the inspections and tests must be made in a secure media not susceptible to alteration. A detailed discussion of the subject of acceptable record books and electronic records can be found under the heading ''Recordkeeping Requirements'' in the General Discussion section of this preamble.

The final rule does not adopt the requirement from the proposed rule that records of inspections be maintained at an appropriate location near each fire suppression system. Instead, paragraph (k) of the final rule establishes the requirement recommended by a commenter that records of inspections and tests be maintained at a surface location at the mine. Storing records on the surface at the mine makes them more accessible to interested parties. Also in response to commenters, the final rule provides access to not only miners' representatives but to authorized representatives of the Secretary. This provision ensures that test and inspections of fire suppression systems are being made and, when a defect is found, that corrective action is taken.

Records for inspection of diesel-powered equipment are also required under § 75.1914(f)(2) of the final rule. However, the recordkeeping requirement under paragraph (j) is not intended to be duplicated. While § 75.1914(f)(2) applies to diesel-powered equipment, some diesel fuel transportation units may be portable trailers with only electrical components and therefore would need to be covered under the recordkeeping requirement under paragraph (j) of this section. The only records required for fire suppression systems under this section of the final rule are for tests and maintenance required under paragraph (i).

Paragraph (k) adopts the proposed requirement that all miners normally assigned in the active workings of the mine be instructed about the hazards inherent to the operation of fire suppression systems, and where appropriate, the safeguards available for each system. This requirement is intended to ensure that all miners working in areas where fire suppression systems operate are instructed in any inherent hazards and necessary precautions associated with the operation of these systems. The final rule modifies the proposal in that the term ''device'' has been replaced by the term ''system'' to clarify that this requirement applies to the entire fire suppression system, not merely a component of it.

One commenter to the proposal agreed with the requirement that miners be trained in the hazards and safeguards of fire suppression systems, but recommended that such training be incorporated in the annual refresher training required under existing § 75.1101–23 for the program of instruction, location and use of fire fighting equipment. Under the final rule, it is anticipated that the instruction on the hazards of fire suppression systems required by this paragraph will be part of the § 75.1101–23 instruction.

Paragraph (l) of this section of the final rule provides that, for purposes of existing § 75.380(f), a fire suppression system installed on diesel-powered equipment and meeting the requirements of § 75.1911 is equivalent to a fire suppression system meeting the requirements of §§ 75.1107–3 through 75.1107–16.

Section 75.380 addresses requirements for escapeways in bituminous and lignite mines. Section 75.380(f) specifies the equipment that can be used in the primary escapeway and the type of fire suppression system required to be installed on this equipment. Section 75.380(f)(4) requires that each piece of mobile equipment operated in primary escapeways, except for continuous miners and as provided in paragraphs (f)(5), (f)(6) and (f)(7) of the section, be equipped with a fire suppression system installed according to §§ 75.1107–3 through 75.1107–16 that is: (1) manually operated and attended continuously by a person trained in the system's function and use; or (2) a multipurpose dry chemical type capable of both automatic and manual activation. The requirement in § 75.380(f)(4) for installation of a fire suppression system that meets the requirements of §§ 75.1107–3 through 75.1107–16 on equipment operating in the primary escapeway presents a potential conflict with the requirement for installation of a fire suppression system on diesel-powered equipment in § 75.1911.

As noted earlier, several commenters to the proposed rule believed that the requirements for fire suppression systems in §§ 75.1107–3 through 75.1107–16 should be made applicable to diesel-powered equipment. However, the requirements in §§ 75.1107–3 through 75.1107–16 make specific reference to electric equipment and components and are not practical for diesel-powered equipment. Any modification of these existing requirements by inserting the term ''diesel-powered'' in the regulatory language would result in an extremely confusing regulation.

After a review of the issue, MSHA has determined that fire suppression systems installed on diesel-powered equipment meeting the requirements of § 75.1911 afford at least equivalent protection to fire suppression systems meeting the requirements of §§ 75.1107–3 through 75.1107–16. Many of the requirements contained in §§ 75.1107–3 through 75.1107–16 are similar to those in § 75.1911. Both sections include requirements for: listed or approved fire

suppression systems; the capacity and size of fire suppression system hardware; a system design that will withstand the normal rigors of mining; compatibility of the extinguishing agent with the mine atmosphere; the system's ability to operate independently of an equipment power supply; sensor operability status indication; and the inclusion of manual actuators. Consequently, the final rule makes clear that fire suppression systems meeting the requirements of § 75.1911 will satisfy the requirements of § 75.380(f)(4).

Section 75.1912 Fire Suppression Systems for Permanent Underground Diesel Fuel Storage Facilities

This section of the final rule establishes requirements for the design, installation and maintenance of fire suppression systems at permanent underground diesel fuel storage facilities. Under the final rule, a permanent underground diesel fuel storage facility is defined as a facility designed and constructed to remain at one location for the storage or dispensing of diesel fuel, which does not move as mining progresses. Section 75.1903(a)(5) of the final rule requires that permanent underground diesel fuel storage facilities be equipped with an automatic fire suppression system that meets the requirements of § 75.1912.

The Diesel Advisory Committee recommended that automatic fire suppression systems be used to address potential fire hazards from ignition and fuel sources at permanent underground diesel fuel storage facilities. The proposed rule included design, installation and maintenance requirements for automatic fire suppression systems for diesel fuel storage areas and stationary diesel-powered equipment.

Commenters to the proposed rule generally accepted the need for fire suppression systems at permanent underground diesel fuel storage facilities. However, comments varied on what the requirements for fire suppression systems should be. Some commenters recommended that only manufacturer's requirements for design, installation and maintenance be used. Other commenters recommended a more detailed approach and suggested that the final rule outline specific requirements for fire suppression systems.

The storage of diesel fuel at permanent underground facilities presents a limited fire hazard when fuel is contained in diesel fuel tanks and safety cans constructed of noncombustible material. However, diesel fuel does present a fire hazard when it is spilled from a tank or leaked from a hose and comes into contact with an ignition source. Spills and leaks of diesel fuel at permanent underground storage facilities can occur when machinery is being refueled, when diesel fuel is being placed in or taken out of storage tanks, or when tanks are damaged or not properly maintained. Potential ignition sources at permanent underground storage facilities include a running diesel vehicle with hot surfaces or hot brake components, malfunctioning electric valves, or pumps used to dispense diesel fuel.

Fire suppression systems are designed to extinguish fires quickly, in their incipient stage, and to reach all locations where a fire may occur. This is important at permanent underground diesel fuel storage facilities because a fire must be extinguished quickly before fuel can further propagate a fire. For example, if a fire is not extinguished at an early stage, leaking diesel fuel can fuel a fire and result in an increase of the intensity and size of the fire.

Fixed fire suppression systems also offer two advantages over portable fire extinguishers: fast attack and application of the suppressant to difficult-to-reach areas where fires may occur. In addition, an automatic fire suppression system has the advantage of detecting and suppressing fires without a person in attendance. Because permanent underground diesel fuel storage facilities will not always be attended, it is necessary to require a means of electrically or mechanically detecting a fire as well as electrically or mechanically activating the fire suppression system upon fire detection. This is important since the potential hazard for mine personnel throughout the mine is significant if a fire in a diesel fuel storage facility could burn unnoticed.

The proposed rule would have established requirements for fire suppression devices for permanent underground diesel fuel storage areas and stationary unattended diesel-powered equipment. Because § 75.1916(d) of the final rule requires all diesel-powered equipment to be attended while operating, and because proposed requirements for stationary unattended equipment have not been adopted in the final rule, § 75.1912 of the final rule has been modified to apply only to permanent underground diesel fuel storage facilities.

A number of commenters to the proposal expressed concern with the requirements for fire suppression systems at permanent underground diesel fuel storage facilities. One commenter stated that since diesel fuel is a Class II combustible liquid, a diesel fuel storage station used and moved with a working section should be treated similar to a lubricating oil or grease storage station. This commenter expressed the view that requirements for limiting the quantity of diesel fuel in temporary storage and requiring portable fire extinguisher protection would be adequate safeguards. Another commenter expressed concern with the ability of a dry compound to suppress a fire over a long enough period of time to prevent re-ignition. This commenter stated that high volumes of ventilating air in a mine can blow dry compound away from the area it is attempting to protect before it can cool down a hot surface created by a fire.

MSHA agrees with the commenter who stated that diesel fuel stored on and moved with a section should be treated as a Class II combustible liquid. The final rule addresses this comment by establishing the allowance for one temporary underground diesel fuel storage area for the short-term storage and dispensing of diesel fuel on each working section, which can move as mining progresses. A temporary underground diesel fuel storage area is defined under § 75.1900 of the final rule as an area of the mine provided for the short-term storage of diesel fuel in a fuel transportation unit, which moves as mining progresses. These temporary underground diesel fuel storage areas are required to meet the requirements in §§ 75.1902, 75.1903 and 75.1906 of the final rule. All other diesel fuel storage areas will be treated as permanent storage facilities and must comply with all of the requirements for such facilities. Permanent diesel fuel storage facilities pose a higher risk of fire than oil and grease storage areas because diesel fuel is generally stored in much greater quantities in underground coal mines. In addition, diesel fuel has a lower flash point than either lubricating oil or grease and can be more easily ignited by a hot surface.

Although permanent diesel fuel storage facilities are provided with ventilating air during normal operations, these facilities are required under § 75.1903(a)(2) of the final rule to be equipped with either a self-closing door or a means for automatic enclosure upon actuation of the fire suppression system. This feature should prevent any ventilating air from affecting the suppressant agent.

An automatic fire suppression system uses a supplemental detection device to provide an early warning of a fire. The fire detection system, which is generally activated by either smoke or heat,

automatically sends a signal to the system for the discharge of suppressant agent. Automatic fire suppression systems activate a network of piping and nozzles to allow suppressant agent to be released and distributed directly at a predetermined fire hazard.

Under the final rule, automatic fire detection and fire suppression systems are required to provide fire suppression for all areas of a permanent underground diesel fuel storage facility. The final rule also requires that the system include audible and visual alarms to warn of fires or system faults and automatic electrical system shutdown in the event of a fire. In addition, the final rule requires all fire suppression systems to be tested and maintained in accordance with manufacturer's recommendations. Finally, the final rule establishes certain recordkeeping requirements for fire suppression systems that are found not to meet required specifications during inspection and testing.

Paragraph (a) of this section of the final rule requires that a fire suppression system required by § 75.1903(a)(5) be an automatic multipurpose dry chemical type (ABC) fire suppression system listed or approved as an engineered dry chemical extinguishing system by a nationally recognized independent testing laboratory and appropriate for installation at a permanent underground diesel fuel storage facility.

The proposed rule would have required an automatic multipurpose dry powder type fire suppression system suitable for the intended application and listed or approved by a nationally recognized independent testing laboratory.

A commenter to the proposal stated that this paragraph should require that ''an automatic fire suppression system suitable for the intended application shall be installed to protect the entire area inside the fire proof enclosure.'' This commenter believed that all of the necessary requirements for fire suppression systems were already addressed in existing part 75, and that it was unnecessary to identify protected coverage components inside the storage facility if the entire area is required to be protected. Another commenter stated that the requirement in the proposal that the ''system be suitable for the intended application'' was ambiguous and could be subject to different interpretations. This commenter stated that the term ''suitable'' could refer to a system that is suitable for a particular type of fire (class B or combustible liquid fire) or it could mean that the system has a sufficient capacity to extinguish a fire. This commenter also recommended that the final rule specify the capacity of fire suppression systems installed at permanent underground diesel fuel storage facilities.

In response to commenters, MSHA evaluated whether the requirements for fire suppression systems in existing § 75.1107 should be extended to apply to permanent underground diesel fuel storage facilities, but has concluded that such an extension would not be appropriate. The fire hazards that exist at permanent underground diesel fuel storage facilities are different from those on electric-powered equipment, due to the storage of large quantities of diesel fuel in close proximity to ignition sources at these facilities. Additionally, because existing § 75.1107 makes specific reference to electrical controls and components on electric-powered equipment, a modification of the existing requirements by inserting the term ''permanent underground diesel fuel storage facility'' in the regulatory language would result in an extremely confusing regulation. Existing fire suppression requirements in part 75 have therefore not been applied to permanent underground fuel storage facilities.

In response to commenters' suggestions, the final rule does not adopt the phrase ''suitable for the intended application'' from the proposal. Instead, the final rule includes the more specific language ''listed or approved as an engineered dry chemical extinguishing system approved by a nationally recognized independent testing laboratory.'' This modification is intended to clarify that an automatic fire suppression system installed at a permanent underground diesel fuel storage facility must be listed or approved by a nationally recognized independent testing laboratory specifically for a fixed engineered dry chemical extinguishing system unit.

The capacity and suitability of fire suppression systems for protecting against specific fire hazards are specified as part of the listing or approval by the nationally recognized independent testing laboratory. The listing or approval ensures that a fire suppression system is properly designed for a particular type of fire protection hazard by putting the system through a series of specific performance tests. The system must also meet rigid design requirements in order to gain listing or approval.

Fire suppression systems should be installed by a qualified individual following the installation and maintenance instructions in the system manufacturer's installation manual. The sizing of a fire suppression system is dependent upon the number of nozzles needed to adequately cover the entire area of a permanent underground diesel fuel storage facility. The number of dry chemical canisters required will be proportional to the amount of area that must be covered by the nozzles. This information can be obtained from the installation manual that is part of the listing or approval documentation. Other installation considerations, such as proper location and guarding of nozzles and other system components to prevent damage, are addressed in the system's installation manual. In addition to the installation requirements, the manual includes provisions for follow-up maintenance and inspection procedures.

One commenter to the proposal recommended that the term ''dry powder'' be deleted from paragraph (a) because this commenter believed that there were many equally effective systems, such as foam/water spray systems, available to protect against fire hazards. Another commenter stated that the terms ''listed'' and ''approved'' were not strong enough. This commenter stated that there was no way of verifying whether a system had been ''listed'' or ''approved'' and recommended that the term ''tested'' replace the term ''listed''.

Although dry chemical is the most commonly used type of suppressant agent in the mining environment and is specifically referenced in paragraph (a) of the final rule, paragraph (a)(1) of the final rule allows for alternate types of fire suppression systems that are no less effective. In addition, the requirement that a system be listed or approved by a nationally recognized independent testing laboratory is more stringent than using the term ''tested''. Under the final rule, when a system is listed or approved by a nationally recognized independent testing laboratory, it means that the system has met performance and design requirements outlined in an industry standard in a certain configuration and for a specific function. Also, if a system has been listed or approved by a nationally recognized independent testing laboratory, it means that the system has met other requirements for inspection, maintenance, and quality control assurances.

Also modified in this paragraph from the proposal is the term ''chemical'' replacing the term ''powder'' and the addition of the reference ''ABC'' for the three classes of fire. These modifications were made in response to commenters' request for clarification and to incorporate more appropriate terminology.

A multipurpose dry chemical type agent is the most commonly used and successfully applied type of suppressant agent in fire suppression systems in underground coal mines. This type of agent is specifically designed to extinguish ABC class fires. A class A fire refers to a fire of combustible solid materials such as paper, rubber, textiles, and cloth, and would involve such items as hosing at a permanent underground diesel fuel storage facility. A class B fire would include diesel fuel. Class C fires involve electrical components and could include such components as lights, pumps, and valves at permanent underground diesel fuel storage facilities.

The term ''engineered'' was added to the final rule in response to commenters' concerns regarding the adequacy of a fire suppression system to address all of the fire hazards at a permanent underground diesel fuel storage facility. An engineered fire suppression system will ensure that all of the fire hazards are addressed since a representative from a fire suppression system manufacturer will go to the facility and evaluate all of the fire hazards. The evaluation by the system manufacturer representative also includes determining the appropriate coverage areas for the fire suppression system, the number and size of dry chemical canisters, the length of piping, and the number of nozzles.

The proposed rule would have allowed the use of inert or halogenate gas suppressant agents in unoccupied and enclosed areas where the use of such suppressants would not pose a toxic hazard. One commenter to the proposal recommended that the use of inert or halogenate gas suppressant agents be prohibited because they create a toxic hazard. This requirement has not been included in the final rule because inert or halogenated gas fire suppression systems are considered an alternate type of fire suppression system that are addressed in paragraph (a)(1) of this section of the final rule. The potential toxic hazard presented by inert or halogenated gas suppressant agent will be evaluated by MSHA on a case-by-case basis as an alternate type system. In addition, typical inert gas agents such as halon 1211 and 1301 are no longer being marketed due to their reported contribution to the ozone depletion of the environment.

Paragraph (a)(1) of the final rule adopts the provision from the proposal that alternate types of fire suppression systems be approved in accordance with § 75.1107–13 of this part. This paragraph of the final rule is intended to allow the use of fire suppression systems other than dry chemical systems, so long as they provide substantially equivalent protection. Under the final rule, MSHA will evaluate alternate types of fire suppression systems, such as foam/water sprinkler-based systems, using the criteria set forth in existing § 75.1107–13.

One commenter to the proposal objected to this provision and stated that only the manufacturer who designs and constructs these systems will know the exact capabilities and limitations of the system. This commenter also stated that this requirement would result in the installation of inadequate fire suppression systems at permanent underground diesel fuel storage facilities, because the requirements in existing § 75.1107–13 are applicable to fire suppression systems installed on equipment.

Existing § 75.1107–13 establishes criteria for the approval of alternate fire suppression devices. Under § 75.1107–13, the appropriate MSHA district manager may approve any fire suppression system or device which provides substantially equivalent protection to what would be achieved through compliance with the standard.

The final rule does not intend to allow alternate types of fire suppression systems that do not adequately address fire hazards at permanent underground diesel fuel storage facilities. Instead, all types of alternate fire suppression systems must be installed and operated in strict accordance with the system manufacturer's recommendations as specified in paragraph (a)(2) of this section of the final rule. Any type of fire suppression system that is not designed and constructed in accordance with industry standards for fire protection will be unacceptable.

Paragraph (a)(2) of the final rule adopts the requirement from the proposal that the suppression system be installed in accordance with the manufacturer's specifications and the limitations of the nationally recognized independent testing laboratory listing or approval. One commenter to the proposal expressed the view that the term ''listing'' was not specific enough and recommended that the language ''independent testing'' be added. As explained earlier, a listing or approval by a nationally recognized independent testing laboratory is more stringent than the use of the term ''testing''. This comment has therefore not been adopted in the final rule.

This requirement ensures that the system is installed within the limits defined by the listing or approval issued by the nationally recognized independent testing laboratory and as specified by the fire suppression system manufacturer. Since the system is performance-tested to a specific standard and in certain configurations, it must be installed within these parameters to be effective.

Paragraph (a)(3) adopts the requirement from the proposal that the fire suppression system be installed in a protected location or guarded to prevent physical damage from routine operations. Damage to any part of the fire suppression system can result in a malfunction of the entire system and in the system not responding to fire hazards. For example, a rock fall can pinch a hose or crush a sensor and create faults that can disable the entire system or a portion of the system.

One commenter stated that the proposed rule did not define what protections were necessary on fire suppression systems and suggested that the systems be fully protected from physical elements, including rib and roof falls. This commenter further stated that this protection is already provided for electrical circuit breakers under existing § 75.901, and that this type of protection is even more vital for the protection of fire suppression systems.

This comment has not been adopted in the final rule because the construction requirements for permanent underground diesel fuel storage facilities at §§ 75.1902 and 75.1903 ensure that fire suppression systems will be protected from the general hazards of the mine environment. The installation requirements in this paragraph ensure that additional protection will be provided for specific system components.

Paragraph (a)(4), like the proposal, requires that the suppressant agent distribution tubing or piping be secured and protected against damage, including pinching, crimping, stretching, abrasion, and corrosion. No specific comments were received on this aspect of the proposal. During the normal mining activity in and around a permanent underground diesel fuel storage facility, a fire suppression system can become damaged from collisions with mining equipment or from daily mining operations. This requirement ensures that fire suppression system components are kept in proper working order and that the entire system remains ready to discharge fire suppressant to the entire area of a permanent underground diesel fuel storage facility.

Paragraph (a)(5) adopts the requirement from the proposal that fire suppression nozzles be protected against the entrance of foreign materials.

No specific comments were received on this aspect of the proposal. The nozzles used on multipurpose dry chemical fire suppression systems can be as small as ⅛ of an inch. If material such as mud, coal dust, or rock dust enters the nozzle, it can prevent the chemical agent from discharging entirely, or alter the pattern and coverage of fire suppressant.

Paragraph (b) of this section of the final rule requires that the fire suppression system provide automatic fire detection and automatic suppression for all areas within a permanent underground diesel fuel storage facility. The proposal would have required automatic fire detection and fire suppression for fuel storage tanks, containers, safety cans, pumps, electrical panels and control equipment in fuel storage areas. The requirement in the final rule responds to commenters'' recommendations that automatic fire detection and suppression be provided for all areas within a permanent underground diesel fuel storage facility enclosure.

Although the listing or approval generally describes certain areas that may pose a fire hazard, it does not specifically identify which hazards must be covered by fire suppression. Fire suppression coverage for the entire area of a permanent underground diesel fuel storage facility is necessary because of the potential fire hazard created by numerous ignition and fuel sources. The proposed coverage of only certain specific hazards within a diesel fuel storage facility would have resulted in other potential hazards not being addressed. Under the proposal, it would have been possible for a fire to begin in one area of the facility that was not specifically covered by fire suppression. Under these circumstances, a fire could be difficult to contain if large quantities of leaked diesel fuel are present throughout the facility. The final rule requires the entire area of a diesel fuel storage facility to be covered because of the likely spread of a fire if a diesel fuel leak develops.

Paragraph (c) of the final rule requires that audible and visual alarms to warn of fire or system faults be provided at the protected area and at a surface location which is continually monitored by a person when personnel are underground. The final rule also requires that, in the event of a fire, personnel be warned in accordance with the provisions set forth in § 75.1101–23. This requirement is intended to provide a means for immediate notification of personnel in the area of a permanent underground diesel fuel storage facility when the fire suppression system detects a fire or identifies a problem with the system. The audible and visual indication of fire detection is important because it alerts personnel in and around the area of a permanent underground diesel fuel storage facility that a fire exists and that a chemical agent is being discharged. The requirement for audible and visual indication of fault detection is established in order to alert personnel working in and around diesel fuel storage facilities that a problem exists with the fire detection system so that the defect can be addressed.

The proposal would have required that audible and visual alarms to warn of fire or system faults be provided at the protected area and at a surface location which is always staffed when personnel are underground who could be endangered by a fire. In addition, the proposal would have required that a means also be provided for warning all endangered personnel in the event of a fire.

Several commenters to the proposal expressed concern over this requirement, stating that the requirement for visual and audible alarms at a surface location would be impractical for many small operators because it would result in operators maintaining a monitoring system to detect fires. These commenters recommended that fire suppression systems be examined regularly to determine system faults, and that audible and visual alerts should only be required at locations where miners are present. Another commenter stated that mines have become lax in responding to fire warnings. One commenter recommended that a formal procedure be established to warn personnel in the event of a fire, and that this procedure should be submitted to MSHA for approval and be included in the mine emergency fire fighting and evacuation plan and in the miners'' annual refresher training. Other commenters stated that the proposed phrase ''always staffed'' does not ensure that a qualified or responsible person will be designated to alert mine personnel underground in the event of a fire. One commenter suggested that the language ''always staffed'' be changed to ''someone who is qualified.''

The continual monitoring by a person on the surface of fire detection and fire suppression system faults is not a burdensome requirement given the chance that a fire or system fault may otherwise go unnoticed. The early warning of a fire at a permanent underground diesel fuel storage facility is critical, due to the presence of numerous ignition sources and large quantities of diesel fuel. If communication is not available, fire fighting efforts can be hampered and the fire can spread. Also, if a program is not instituted to warn of a fire, personnel located in other areas of the mine can be put at risk of being cut off from escape. In addition, faults in fire suppression systems need to be identified and communicated to maintenance personnel so that system defects can be corrected. If an automatic fire suppression system is not functioning properly and a fire breaks out, it could result in a serious hazard since the fire would not be extinguished in its incipient stage. The inspection and maintenance requirements for fire suppression systems specified under the final rule should ensure the reliability of the system and minimize the occurrence of false alarms.

The final rule responds to commenters by providing flexibility in the method used to alert mine personnel that a fire exists at a permanent underground diesel fuel storage facility. Under the final rule, when a fire is detected, personnel are to be warned in accordance with the provisions set forth in existing § 75.1101–23. Section 75.1101–23 requires that each operator of an underground coal mine adopt a program for the instruction of all miners in fire fighting and evacuation. The program of instruction is submitted to the appropriate MSHA district manager for approval on a mine-by-mine basis. By including the requirement for early warning of fires at permanent underground diesel fuel storage facility in § 75.1101–23, the final rule allows this important communication provision to be developed by taking into consideration mine-specific conditions.

This section of the final rule also requires that a person be assigned on the surface whose duties include receiving notification of fire detection and alerting underground personnel that a fire has been detected. The final rule does not specify any qualification or training for the person designated on the surface. However, the instruction of all mine personnel, including the designated person staffed at a surface location, is a critical element of an early warning fire response strategy and is the responsibility of the mine operator under § 75.1101–23.

Paragraph (d) of this section of the final rule requires that the fire suppression system deenergize all power to the diesel fuel storage facility when actuated except that required for automatic enclosure and alarms. This requirement was added to the final rule in response to commenters' concerns regarding reignition of fires caused by electrical failures. As stated earlier, fire

suppression systems are designed to suppress fires in their incipient stage. If the ignition source and fuel sources remain present after the fire suppression system has been actuated, the fire can reignite. Shutting off any unnecessary electrical power to the facility will remove a potential ignition source and reduce the likelihood that the fire will reignite.

The Ontario accident data for fires on diesel equipment supports the need for shutting off ignition sources to prevent reignition. This hazard is just as significant for diesel fuel storage facilities, since potential electrical ignition sources are present with large quantities of diesel fuel. The final rule is also consistent with existing § 75.1107–4, which requires that the electric power source to the protected equipment be disconnected when the fire suppression system is actuated.

This requirement also applies to any fuel transportation unit located in a permanent diesel fuel storage facility that is equipped with an electric panel and controls directly connected to an electrical power source.

Paragraph (e) of the final rule, like the proposal, requires that fire suppression systems at permanent underground diesel fuel storage facilities be equipped with two manual actuators. The final rule requires that at least one actuator be located within the fuel storage facility and at least one actuator be located a safe distance away from the facility in intake air, upwind of the storage facility. The final rule is intended to ensure that at least two manual actuators be provided in locations that are accessible to mine personnel working in or around a permanent diesel fuel storage facility. This requirement is similar to the fire extinguisher location requirements for underground fuel storage facilities and areas in § 75.1903(b)(1) and (b)(2) of the final rule, which provide that at least one portable fire extinguisher be located outside of the storage facility or area upwind of the facility, in intake air, to enable miners to reach the actuator in the event of fire. To allow flexibility in complying with the requirements of this paragraph, what constitutes a ''safe distance from the facility'' has not been specified in the final rule. The location of the actuator outside the facility should be determined based on mine conditions and the particular usage of the facility.

Commenters generally expressed support for this aspect of the proposal. One commenter recommended that a requirement be added to address manual application of water in lieu of manual actuators when sprinkler systems are used. Another commenter suggested that actuators be separated from each other, and specifically recommended that a check valve be used to ensure that one faulty actuator does not circumvent or defeat the use of the other actuator.

The final rule specifically addresses only requirements for dry chemical fire suppression systems, and a water sprinkler type fire suppression system would be considered an alternate type of fire suppression system under paragraph (a)(1) of this section. As a result, the final rule does not adopt the suggestion that an additional requirement be added to address manual application when water sprinkler systems are used. In addition, the final rule does not include a requirement for a check valve between the actuators for fire suppression systems. This is considered part of the system design and is more appropriately addressed by the system manufacturer and the listing or approving nationally recognized independent testing laboratory.

Paragraph (f) of the final rule adopts the requirement from the proposal that the fire suppression system remain operational in the event of an electrical system failure. No specific comments were received on this aspect of the proposal. This requirement is intended to ensure that the system will be functional if power from external sources is lost. The phrase ''engine shutdown'' has not been adopted from the proposal, because the phrase would have applied to fire suppression system requirements for unattended diesel-powered equipment. Because the final rule does not permit the operation of unattended diesel-powered equipment, this phrase is no longer necessary.

Paragraph (g) adopts the requirement from the proposal that electrically operated detection and actuation circuits be monitored and provided with status indicators showing power and circuit continuity. The final rule also requires that automatic detection systems be provided with a means to indicate the functional readiness status of the detection system. This paragraph requires that the fire suppression system provide a means of notifying miners and maintenance personnel of the functional readiness status of both the detection and actuation circuit and the power source. This paragraph also requires that automatic systems not electrically operated provide a means of notifying the operator or maintenance person of the functional readiness of the system.

This requirement is included in the final rule to ensure the continuity of electrical systems used to detect faults on fire suppression systems. This requirement will serve to alert miners and maintenance personnel when a fire suppression system is not in a state of readiness due to an electrical system fault. The continuity of the electrical system used to detect fires and actuate the system is important since an automatic system is based on early detection and automatic actuation.

One commenter to the proposal stated that the fire suppression system should also be protected as specified in § 75.1101–17, which requires that each dry powder chemical system be adequately sealed to protect all components of the system from moisture, dust, and dirt.

The protection of the fire suppression system components from moisture and dust is adequately addressed by the requirements of paragraphs (a)(3), (a)(4) and (a)(5) of this section of the final rule. In addition, the listing or approval typically includes requirements for a dust shield and checks of the powder for dryness.

Paragraph (h) of the final rule adopts the requirement from the proposed rule that each fire suppression system be tested and maintained in accordance with the manufacturer's recommended inspection and maintenance program and as required by the nationally recognized independent testing laboratory listing or approval, and be visually inspected at least once each week by a person trained to make such inspections.

The proposed rule would have required each fire suppression device to be visually inspected at least once each week by a person qualified to make such inspections. The proposal also would have required that each fire detection device be tested and maintained in accordance with applicable requirements in § 75.1100.

Commenters to the proposal generally expressed support for maintenance of fire suppression systems installed at permanent underground diesel fuel storage facilities. A number of commenters, however, recommended that a maintenance program specifically designed for fire suppression systems be developed at each mine. One commenter to the proposal expressed concern over the requirement for weekly visual inspections of fire suppression systems at permanent underground diesel fuel storage facilities. This commenter recommended that there be frequent functional testing of the suppression systems to ensure that lines are not blocked or pinched. Another commenter stated that the proposal did not specify the types of tests that should be conducted on fire suppression systems at permanent underground

diesel fuel storage facilities. Other commenters expressed concern over the frequency of tests and inspections. These commenters recommended that detailed inspections and functional tests be conducted semiannually or quarterly. One commenter recommended that fire suppression systems be treated in the same manner as portable fire extinguishers and that inspections be conducted once a week and physically tested twice a year.

Under the final rule, the weekly visual inspection is not intended to be an in-depth examination. The weekly visual inspection is intended to be a quick check to verify that there are no obvious defects, such as disconnected hose lines or altered nozzles. An in-depth inspection takes place as part of the manufacturer's recommended testing and inspection procedure also required under the final rule. Fire suppression system manufacturers are most familiar with the design and operation of their systems and are best able to identify the components that need maintenance, the type of maintenance needed, and the frequency of maintenance. Adequate maintenance is essential because of the importance of these systems in fire protection. The maintenance and testing requirements for fire suppression systems are in addition to the requirement set forth for a weekly visual inspection.

The manufacturer's inspection and maintenance procedures are spelled out in great detail in the manufacturer's manual and include the recommended inspection intervals, which depend on the environment in which the system operates. In addition, these inspection and maintenance procedures are evaluated as part of the system's approval or listing by a nationally recognized independent testing laboratory.

This paragraph is identical to the requirement in § 75.1107–16(a). As stated earlier, the fire suppression system requirements in §§ 75.1107–3 through 75.1107–16 cannot be directly applied to diesel equipment because the fire hazards presented by diesel fuel are different from those on electric-powered equipment, due to the close proximity of large quantities of diesel fuel to potential ignition sources.

Also modified in this paragraph is the replacement of the term ''device'' with the term ''system''. This was done because MSHA intends that the whole system be inspected, not just individual components of a system.

A person ''trained'' to perform the inspections and tests required by paragraph (h) of this section of the final rule is not required to be a qualified person under § 75.1915. However, the final rule intends that the person performing tests and inspections of fire suppression systems have sufficient knowledge to determine whether a fire suppression system is functioning properly. MSHA anticipates that since fire suppression systems are common to both electric and diesel equipment, the mine operator will work with either the fire suppression system manufacturer or distributor to ensure that persons responsible for the maintenance of fire suppression systems are adequately trained.

Paragraph (i) of the final rule establishes recordkeeping requirements for the inspection and maintenance requirements for fire suppression systems set forth in paragraph (h), and requires that persons performing inspections and tests of these systems record results of tests and inspections only when a system does not meet the installation or maintenance requirements of this section. Under these circumstances, the person performing the inspection or test is required to indicate the fuel storage facility where the fire suppression system did not meet the installation or maintenance requirements of this section, the defect found, and the corrective action taken. The final rule also requires that these records be kept either manually or electronically in a secured manner that is not susceptible to alteration. In addition, the final rule requires that records be maintained at a surface location at the mine for one year and made available for inspection by an authorized representative of the Secretary and by miners representatives.

The proposal would have required that a record be kept of all of the inspections of fire suppression systems and maintained at an appropriate location for each fire suppression device. One commenter to the proposal recommended that the records required by this section be made available to all interested parties and that this information be centrally located on the surface of the specific mine.

Office of Management and Budget guidance comments directed MSHA to reexamine the recordkeeping requirements in the proposal and recommended that the final rule require paperwork that was the least burdensome necessary. MSHA has done so, and the final rule does not adopt the proposal that all fire suppression system test and maintenance results be recorded. In response to commenters and consistent with other provisions of the final rule, paragraph (i) requires that records of inspections and tests be made only when a fire suppression system does not meet the installation or maintenance requirements of this section. This requirement is important because if a fire suppression system does not meet its listing or approval, the defect can be of a nature and seriousness that the system can fail when a fire begins. This requirement is intended to ensure that records are maintained and made available to interested parties when a defect is found, and that the appropriate level of mine management is made aware of defects requiring attention.

The final rule does not specify a particular way of recording the test and maintenance data, only that it be located at the surface of the mine. The records of the inspections and tests must be made in a secure media not susceptible to alteration. A detailed discussion of the subject of acceptable record books and electronic records can be found under the heading ''Recordkeeping Requirements'' in the General Discussion section of this preamble.

The final rule does not adopt the requirement from the proposed rule that records of inspections be maintained at an appropriate location near each fire suppression system. Instead, paragraph (i)(3) of this section of the final rule establishes the requirement recommended by a commenter that records of inspections and tests be maintained at a surface location at the mine. Storing records on the surface at the mine makes them more accessible to interested parties. Also in response to commenters, the final rule provides access not only to miners representatives but to authorized representatives of the Secretary. This provision ensures that test and inspections of fire suppression systems are being made and, when a defect is found, corrective action is taken.

Paragraph (j) adopts the proposed requirement that all miners normally assigned in the active workings of the mine be instructed about the hazards inherent to the operation of fire suppression systems, and where appropriate, the safeguards available for each system. This requirement is intended to ensure that all miners working in areas where fire suppression systems operate are instructed in any inherent hazards and necessary precautions associated with the operation of these systems. The final rule modifies the proposal in that the term ''device'' has been replaced by the term ''system'' to clarify that this requirement applies to the entire system rather than to system components.

One commenter to the proposal agreed with the requirement that miners be trained in the hazards and safeguards

of fire suppression systems, but recommended that such training be incorporated in the annual refresher training required under existing § 75.1101–23 for the program of instruction, location and use of fire fighting equipment. Under the final rule, it is anticipated that the instruction on the hazards of fire suppression systems required by this paragraph will be part of the § 75.1101–23 instruction.

Section 75.1913—Starting Aids

This section addresses the storage and use of volatile fuel starting aids for diesel-powered equipment. The requirements of the final rule are similar to the requirements contained in the proposal, with some minor modifications. This section places limitations on the use and storage of volatile fuel starting aids underground, to minimize the risks of fire or explosion. Under the final rule, volatile fuel starting aids must be used in accordance with recommendations of the starting aid manufacturer, the engine manufacturer, and the machine manufacturer. The final rule also includes requirements for the storage of volatile fuel starting aids, and prohibits the use of starting aids under certain circumstances, such as in areas where permissible equipment is required or where 1.0 percent or greater concentration of methane is present. Connection of compressed oxygen or compressed flammable gases to diesel air-start systems is also prohibited.

The Diesel Advisory Committee recognized that improper storage and handling of starting aids could present fire and explosion hazards in underground coal mines. The Committee therefore recommended that MSHA regulate the storage and use of starting aids. The proposed rule set forth limitations on the use of starting aids, to minimize the hazards associated with their use in the underground coal mine environment. The requirements of the final rule reflect MSHA's determination that volatile fuel starting aids can be safely used underground if appropriate precautions are taken.

Volatile fuel starting aids, normally ethyl ether, facilitate the starting of diesel engines in cold temperatures. In very cold weather the compression ignition of diesel engines cannot easily reach the high temperature necessary to ignite diesel fuel. This makes it difficult, and in some cases impossible, to start the engine without special measures, such as the use of volatile fuel starting aids. Volatile fuel starting aids sprayed into a cold diesel engine help to start the engine because they ignite at a much lower temperature than diesel fuel. Starting aids that are ignited in a diesel engine will both heat up the cylinder walls of the engine and start the engine spinning, resulting in easier ignition of the diesel fuel.

The use and storage of volatile fuel starting aids in underground coal mines present safety hazards, due to the starting aids' high volatility. When these substances are stored or used improperly, they can present a very real danger of fire or explosion, particularly in the underground coal mine environment.

Commenters were divided on whether the use of starting aids should be permitted in underground coal mines. Some commenters recommended a complete prohibition of the use of volatile fuel starting aids underground, stating that starting aids are extremely flammable, have a very low flash point, and can be ignited by any source of heat in the mine. These commenters believed that there were already numerous potentials for fire in the underground coal mine environment, and that permitting the use of starting aids would introduce another unnecessary hazard into that environment. Some commenters believed that starting aids were used at some mines as a substitute for effective maintenance of diesel engines, and that a properly maintained engine should be able to start on its own, without the boost that a starting aid provides.

Other commenters advocated allowing the use of starting aids but strictly controlling their use. Several commenters stated that starting aids were currently being used safely and effectively in their mines, and that any hazards arising from their use could be controlled by careful handling. These commenters stated that proper maintenance of diesel engines does not prevent starting difficulties in cold temperatures. One commenter observed that air temperatures at mines located at elevations of 9,000 or 10,000 feet can fall well below 0° F. Several commenters observed that a diesel-powered machine that has been shut down and has been sitting in cold weather, such as over a weekend, can be virtually impossible to start without the use of a starting aid.

Some of the commenters who favored prohibiting the use of volatile fuel starting aids underground stated that starting aids sometimes were used as a substitute for effective maintenance. Although an engine that has not been properly maintained could in some cases be started more easily with starting aids, this fact alone does not compel the prohibition of volatile fuel starting aids in underground coal mines. The final rule requires regular maintenance and testing of diesel-powered equipment, designed to ensure that the equipment is kept in good operating condition. Compliance with these requirements should eliminate any need to use starting aids as a replacement for effective equipment maintenance.

Paragraph (a) of this section requires that volatile fuel starting aids be used in accordance with the recommendations of the starting aid manufacturer, the engine manufacturer, and the machine manufacturer. The proposed rule would have required that volatile fuel starting aids be used in accordance with the specific recommendations in the engine manufacturer's maintenance and operations manual.

Several commenters noted that the written documentation from machine or engine manufacturers does not always address correct use of volatile fuel starting aids, and expressed their concern that starting aids could create serious hazards if not used in conformance with specific recommendations. In response to these comments, the final rule provides that starting aids must also be used in accordance with the recommendations of the starting aid manufacturer, ensuring that mine operators will at a minimum be guided by those instructions. Starting aid manufacturers are already required by Occupational Safety and Health Administration regulations to develop Material Safety Data Sheets (MSDS) for their products. To comply with this provision the mine operator should obtain an MSDS and any other product safety and use information prepared by the starting aid manufacturer on the safe use of that particular starting aid, and use the starting aid in accordance with those instructions.

Because engine and machine manufacturers are in the best position to determine whether volatile fuel starting aids can be safely and effectively used with a particular engine or machine, the final rule also requires mine operators to use starting aids in accordance with any available recommendations from the engine and machine manufacturers on the safe use of starting aids. This requirement recognizes that volatile fuel starting aids can damage engine or machine components and result in the failure of machine safety devices or increase exhaust emissions. For example, a buildup of the starting aid in intake or exhaust components could result in an explosion. Use of starting aids in accordance with the recommendations of engine and machine manufacturers will minimize

any safety hazards and avoid damage to the engine or machine, such as damage to intake or exhaust components, especially on permissible equipment.

Although the final rule is not intended to prohibit the use of starting aids if such information has not been developed by the machine or engine manufacturer, MSHA encourages diesel-powered engine and machine manufacturers who do not already do so to develop recommendations on the use of volatile fuel starting aids with the engines and machines they produce.

Paragraph (b) requires that containers of volatile fuel starting aids be conspicuously marked to indicate their contents. This paragraph further requires that containers of volatile fuel starting aids that are not in use be stored in metal enclosures that are used only to store starting aids. The metal enclosures themselves are required to be conspicuously marked, secured, and protected from damage.

The requirement that starting aid containers be conspicuously marked was not included in the proposal, but has been incorporated in the final rule in response to commenters' concerns over the serious dangers that could result if starting aids containers were damaged in any way. The container marking requirement is intended to prevent inadvertent damage to containers by ensuring that mine personnel are aware of the containers' contents. Labels that are affixed to the starting aid can by the starting aid manufacturer will satisfy the requirement for container marking.

The final rule also requires that enclosures for containers of starting aids be made of metal, marked, secured, and protected from damage, and used only for the storage of starting aids. The proposed rule would have required only that starting aids be stored in a fire proof enclosure when not in use. The final rule includes additional requirements to address commenters' concerns that starting aid containers could be inadvertently damaged, resulting in the unintentional release of the highly flammable starting aid. These additional requirements are similar to the requirements in the final rule that apply to safety cans containing diesel fuel that are transported on vehicles. Because both volatile fuel starting aids and diesel fuel present a possible fire hazard, the final rule imposes similar precautions for the handling and storage of these substances. The final rule also prohibits any other items, such as tools, from being stored with volatile fuel starting aids. This prohibition responds to commenters' concerns that containers of volatile fuel starting aids could be damaged through contact with other items, resulting in the release of the starting aid and the creation of a potentially hazardous situation.

Some commenters noted that the term ''fire proof enclosure'' used in the proposed rule was not defined anywhere in the regulations, and recommended the substitution of the term ''noncombustible''. Other commenters opposed the use of the term ''noncombustible'' because of their concern that a container that is simply noncombustible may not be substantial enough to protect starting aid containers. MSHA agrees with commenters who believe that the term ''fire proof'' is ambiguous, and also with commenters who oppose the substitution of the term ''noncombustible'' for the term ''fire proof'' because containers that are ''noncombustible'' may not be sufficiently durable. The final rule therefore requires that containers of starting aids be stored when not in use in metal enclosures, which are not only noncombustible but also sturdy enough to protect the starting aid containers that are stored there.

Paragraph (c) adopts the requirements of the proposal, and imposes specific restrictions on where and under what circumstances volatile fuel starting aids may be used in underground coal mines, to minimize any hazards presented by their use. Paragraph (c)(1) prohibits volatile fuel starting aids from being taken into or used in areas where permissible equipment is required. Volatile fuel starting aids can create flames that flame arresters, which are designed to provide protection against methane ignitions, cannot stop. Use of volatile fuel starting aids in an area where permissible equipment is required could lead to an ignition of any methane in the area. Use of starting aids in those areas is therefore forbidden in the final rule.

Paragraph (c)(2) prohibits the use of volatile fuel starting aids in the presence of open flames or burning flame safety lamps, or when welding or cutting is taking place. As noted by several commenters, vapors from volatile fuel starting aids are easily ignited. The final rule requires that volatile starting aids be kept away from the potential ignition sources of open flames or welding or cutting. Starting aids are also prohibited in the presence of burning flame safety lamps. The gauze in a flame safety lamp, although safe for use in the presence of methane, will not prevent the propagation of the flame by the ether vapors given off by the starting aid. The final rule is intended to prohibit these ignition sources in the immediate vicinity of any area where volatile fuel starting aids are being used.

Paragraph (c)(3) adopts the proposal to prohibit the use of volatile fuel starting aids in any area of the mine where 1.0 percent or greater concentration of methane is present. This requirement minimizes the possibility that starting aid vapors that have accidentally been ignited would spread to methane in the surrounding area. Permissible equipment may not prevent a flashback of fire that could ignite a methane atmosphere.

The proposed rule would have prohibited the use of starting aids in areas of the mine where 1.0 percent or greater of methane is detected. The final rule has been clarified to reflect that volatile fuel starting aids must not be used where 1.0 percent or greater of methane is ''present'', thereby placing on the mine operator the responsibility of ensuring that methane levels are within acceptable limits before volatile fuel starting aids are used.

Paragraph (d) imposes limitations on the use of compressed gases as starting aids for diesel-powered engines. The final rule adopts the proposal's prohibition of the connection of compressed oxygen or compressed flammable gases to diesel air-start systems. Commenters generally supported this restriction. The use of compressed oxygen in the presence of engine lubricants, which are normally in diesel air start-systems, presents an immediate danger of a fire. The final rule consequently forbids the use of compressed oxygen for this purpose. Additionally, the introduction of compressed flammable gases into the machine's compressed air system presents not only the same fire hazard as compressed oxygen, but also a danger of explosion from flammable gases being placed in close proximity to possible sparks from the diesel engine. The final rule therefore also prohibits the use of compressed flammable gases in diesel air-start systems. Nonflammable gases, such as nitrogen, are permitted for this purpose.

Section 75.1914 Maintenance Of Diesel-Powered Equipment

Section 75.1914 sets forth maintenance, repair and testing requirements for diesel-powered equipment, and also indicates the level of training or qualification a person must have to perform these important tasks. The rule generally requires that diesel-powered equipment be maintained in safe and approved condition, and specifically requires weekly equipment examination, weekly testing and evaluation of gaseous

emissions, flushing and draining of scrubbers, and changing of air filters. A person must be qualified under § 75.1915 to perform maintenance and repairs of approved and other specified features on diesel-powered equipment, and to conduct weekly equipment tests and examinations. However, the rule allows other functions required under this section to be performed by a person not qualified under § 75.1915, so long as the person has been trained in the task.

This section of the final rule recognizes that effective equipment maintenance is an indispensable element in reducing the health and safety hazards of diesel-powered equipment, and that adequate training of maintenance personnel is an important part of ensuring that such work is performed correctly. The purpose of the requirements of this section is to ensure that diesel-powered equipment is properly maintained so that it does not deteriorate through neglect, abuse, or normal use and result in a safety or health hazard to miners.

Virtually all commenters to the proposed rule supported the need for maintenance requirements for diesel-powered equipment used in underground coal mines. Commenters agreed that regular maintenance and routine examination of equipment is essential, as the performance of even the best-designed equipment will decline over time without proper maintenance. Inadequate maintenance of diesel equipment can result in the creation of fire or explosion hazards, and the levels of harmful gaseous and particulate components in diesel exhaust can increase when equipment is poorly maintained.

Several commenters to the proposed rule provided specific examples of the problems and hazards that result when maintenance personnel are poorly trained. Some commenters stated that inadequately trained personnel frequently failed to maintain diesel equipment in approved condition, causing the engines to deteriorate and resulting in increased levels of harmful exhaust gases. Commenters also reported that untrained persons were more likely than properly trained persons not only to allow safety systems to malfunction in the first place, but also to bypass the malfunctioning safety system in order to continue operating the machine, rather than to repair the system.

Paragraph (a) of this section retains the language of the proposed rule and requires that all diesel-powered equipment used in underground coal mines be maintained in approved and safe condition or removed from service. Several commenters recommended that the word ''approved'' be deleted, in the belief that it would be acceptable to use permissible equipment in non-approved condition when the machine was being operated in an outby location.

Paragraph (a) of the final rule prohibits the use of diesel equipment that is not in approved and safe condition. This prohibition includes the operation of permissible diesel-powered equipment in outby areas when an approved feature has been disabled. There are several reasons that this requirement has been adopted in the final rule. Many types of approved diesel equipment are extremely mobile, moving easily from areas of the mine where permissible equipment is required to areas where it is not, and there is nothing to distinguish a piece of diesel-powered equipment that has not been maintained in permissible condition from one that has. Both bear MSHA approval plates. Additionally, temperature sensors and other safety system components on diesel-powered equipment can be permanently damaged by exposure to high temperature exhaust gas when the equipment is not maintained in approved condition and a safety system is bypassed. The final rule therefore requires that equipment be maintained not only in safe condition but also in approved condition.

Paragraph (b) requires that maintenance and repairs of approved features, and the features required by §§ 75.1909 and 75.1910, be made only by a person qualified under § 75.1915. The final rule retains the concept of the proposal that the maintenance and repair of certain features of diesel-powered equipment be performed by a qualified person. The majority of commenters supported mandatory training and some form of qualification for those individuals performing these functions because it would help to ensure that diesel equipment is adequately maintained and kept in good operating condition. The Diesel Advisory Committee also recommended that qualified persons be responsible for the more complicated systems on the machine, such as the approved components.

A more extensive level of training is needed to ensure that persons working on more complex equipment features are adequately skilled. Additionally, MSHA machine approval requirements are largely performance-oriented, and equipment manufacturers consequently have significant latitude in designing their equipment to satisfy MSHA's permissibility requirements. Because a variety of equipment designs could accomplish the safety objectives mandated by an MSHA approval, approved equipment does not always conform to easily recognizable standards, and the ability to perform maintenance and repair work on the more complex features of diesel-powered equipment requires a comprehensive understanding of the equipment's design. The final rule therefore adopts the requirement of the proposal that persons performing work on certain specified features of diesel-powered equipment be qualified under § 75.1915, which requires completion of a training program developed by the mine operator.

The proposed rule specified only that ''approved features'' must be maintained and repaired by a person qualified under § 75.1915, and did not include within its scope ''features required by §§ 75.1909 and 75.1910'' as does paragraph (b) of the final rule. However, the scope of this requirement under the final rule is essentially the same as it would have been under the proposed rule. Under the proposed rule, all nonpermissible equipment, with the exception of a limited class of light-duty equipment and stationary unattended equipment, would have been subject to a whole machine approval under part 7. Because the final rule does not require whole machine approval of nonpermissible equipment, and instead requires that this equipment be provided with the safety features set forth in §§ 75.1909 and 75.1910, essentially the same features must be maintained and repaired by a qualified person under the final rule as would have been required under the proposal.

Paragraph (c) of the final rule requires that the water scrubber system on diesel-powered equipment be drained and flushed, by a person who is trained to perform this task, at least once during each shift that the equipment is operated. The proposed rule contained the same requirement for flushing scrubbers, but did not specify what type of training was required for the person performing the task.

The rationale behind the requirement for flushing and draining is that routine cleaning of scrubbers, which cool equipment exhaust gases and act as flame arresters, is essential to prevent a buildup of solid exhaust particles and sludge in the scrubber. This condition can eventually block internal passages of the scrubber, impairing the scrubber's effectiveness and compromising safety in the mine. The Advisory Committee also recommended that MSHA require mine operators to change scrubber water on a regular basis.

Commenters generally supported regular draining and flushing of

scrubber systems, although some commenters questioned whether the rule should specify the point in the shift when draining and flushing must be done. Commenters also questioned what level of qualification was necessary as a prerequisite to performing this task. The consensus of the Advisory Committee was that routine maintenance, such as changing scrubber water, could be performed by a person who is not certified, and that task training would be sufficient in those situations.

MSHA agrees that draining and flushing of the scrubber is a relatively straightforward task, and that the comprehensive training required for qualification under § 75.1915 is unnecessary to ensure that persons perform this task competently. The final rule therefore clarifies MSHA's intention that scrubber draining and flushing need not be done by a person qualified under § 75.1915, only that the person be trained to perform the task. MSHA expects that the draining and flushing of the water scrubber system will typically be performed by the machine operator.

In response to the proposed requirements for scrubber maintenance, some commenters stated that the final rule should specify that scrubber systems must be drained and flushed at the beginning of the shift. These commenters were concerned that if the rule did not specifically require draining and flushing at the beginning of the shift, MSHA could not issue a citation for violation of this standard until the end of the shift, making enforcement difficult. Other commenters advocated that the final rule require the scrubber system to be drained and flushed at the end of the shift, allowing mine operators to perform the task as part of the routine maintenance to prepare the machine for the next shift.

MSHA has carefully considered the comments on this issue, and has chosen to retain the language of the proposed rule in the final rule, which simply requires scrubber systems to be flushed and drained once during each shift that the equipment is operated, without specifying when during the shift the task must be performed. This is consistent with MSHA's intention to afford mine operators reasonable flexibility in performing the maintenance required by the final rule. However, MSHA recommends that mine operators perform scrubber maintenance at about the same point during every shift, thereby ensuring that scrubbers are flushed and drained every 8 to 10 hours (depending on the length of the shift) during the equipment's operation.

Paragraph (d) requires that the intake air filter be replaced or serviced either when the intake air pressure drop device indicates that it is necessary, or when the engine manufacturer's maximum allowable air pressure drop level is exceeded. The final rule also requires that this replacement or servicing be done by a person who is trained to perform the task.

Maintenance of diesel machine air filters is an important element of overall equipment maintenance. Air filters screen the air taken in by the machine for combustion. Over time, the filters load up with dust and dirt, restricting air flow and making the engine work harder to pull in the same amount of air. As the engine works harder, greater quantities of engine emissions are produced, adversely affecting the quality of the air that miners breathe. Research and experience indicate that air restrictions have a negative effect on emission generation, specifically carbon monoxide and diesel particulate.

The proposed rule would have required filter replacement or servicing when the filter was ''dirty'' as well as when the machine's intake air pressure drop device indicated that it was necessary. The proposed rule would not have required, as does the final rule, filter maintenance when the manufacturer's maximum allowable air pressure drop level is exceeded.

Commenters generally supported the requirements of this paragraph, and several stated that dirty air filters were frequently to blame when engines began to produce increased levels of carbon monoxide. However, several commenters objected to mandatory filter replacement and servicing when the filter was ''dirty'', pointing out that the term ''when dirty'' was ambiguous. Commenters stated that air filters catch dirt continually, and are therefore ''dirty'' to some degree at all times. MSHA agrees with commenters on this issue, and has concluded that the use of the term ''when dirty'' could create uncertainty for mine operators in complying with the provision. The requirement that filters be replaced or serviced ''when dirty'' has therefore not been adopted in the final rule.

The final rule does adopt the requirement of the proposed rule that air filters be replaced or serviced when the intake air pressure device indicates that it is necessary. Intake air pressure devices monitor the air pressure across the filter. As the air filter loads up with dust and dirt the pressure drop across the filter will increase, and at a certain point the intake air pressure device will signal that the filter is sufficiently blocked by dirt to require servicing or replacement.

Not all types of diesel-powered equipment are presently equipped with intake air pressure devices. Under the proposed rule, air filters without air pressure devices would have been required to be changed or serviced ''when dirty''. However, as discussed above, that provision has not been included in the final rule. One commenter to the proposed rule stated that service indicators specified by the manufacturer are sufficient for determining when an air filter should be changed. A service indicator is simply the manufacturer's specification of the drop in pressure across the air filter, reflected by the air pressure gauge on the machine, indicating that the air filter must be serviced or replaced. MSHA agrees that service indicators provide an objective and measurable method of determining the need for air filter servicing for machines without intake air pressure devices. The final rule has therefore been modified to provide that air filters must be replaced or serviced when the engine manufacturer's maximum allowable air pressure drop level is exceeded.

The proposal did not specify the level of training or qualification required for the person performing air filter maintenance under this paragraph, and commenters questioned whether MSHA intended that this task be performed by a person qualified under § 75.1915. Commenters generally stated that air filter maintenance did not need to be conducted by a qualified person, only by someone who has been trained to perform the task. This view is consistent with the consensus of the Advisory Committee that simple maintenance activities, such as changing air filters, could be performed by miners who are not qualified or certified. Accordingly, the final rule specifies that air filter maintenance must be performed by a person who has received training in the task.

Paragraph (e) requires that mobile diesel-powered equipment that is to be used during a shift be visually examined by the equipment operator before being placed in operation, and that equipment defects that affect safety be reported to the mine operator. This requirement is identical to that of the proposed rule, and was supported by commenters.

MSHA intends that the examinations required under this paragraph consist of the equipment operator conducting a check of the equipment before operating it to verify that the machine has no obvious safety defects, such as fuel leaks, loose batteries, or accumulations of combustible materials on the

machine. The language of the final rule has been changed slightly to require that the equipment be ''visually examined'' rather than ''inspected'', to better convey the nature of the examination. Such an examination will provide a regular check on some of the more conspicuous equipment problems. This paragraph also requires that observed defects be reported promptly to the mine operator, which could be a responsible management official, such as a superintendent or foreman. The word ''promptly'' has been included in the final rule to clarify that safety defects observed during this check should be directed to a responsible management official in a timely manner.

Paragraph (f) provides that all diesel-powered equipment must be examined and tested weekly by a person qualified under § 75.1915. Commenters generally agreed with the concept of mandatory equipment examination at regular intervals, although several commenters stated that only diesel equipment that was in use should be subject to required examinations, advocating revision of the rule to reflect that only equipment ''in service'' is subject to weekly examination.

Although MSHA understands the basis for these commenters' concerns, MSHA has concluded that inserting the term ''in service'' in the final rule could be misinterpreted by some mine operators to exclude equipment from the weekly examination requirement that the Agency does not intend to exclude. For example, some operators may consider equipment to be out of service if it has not been operated for an extended period, even though the equipment remains in the mine and could be operated at any time. MSHA takes a very broad view of what equipment is ''in service,'' regarding all equipment not located in maintenance shops or surface storage areas as being ''in service'' and subject to weekly examination and testing. MSHA has therefore not adopted the change advocated by commenters.

Although commenters supported the concept of regular examination and testing of diesel-powered equipment, there was no clear consensus on how regularly equipment must be examined. A few commenters who raised the issue of the frequency of required equipment examinations referred to maintenance schedules for diesel-powered equipment in place at their mines, with examination intervals of one week, two weeks, or every 150 hours of equipment operation. Other commenters stated that examination requirements for diesel-powered equipment should be similar to those for electrical equipment. The latter comment is consistent with the unanimous recommendation of the Advisory Committee that diesel-powered equipment be maintained on the same basis as electrical equipment.

MSHA has concluded that testing and examination of diesel-powered equipment on a weekly basis will ensure that equipment is being maintained in safe and healthful condition. Weekly examination of electrical equipment in underground coal mines has been required and has served as an effective check for adequate equipment maintenance for more than 20 years. Weekly examinations have consequently become an accepted element of routine equipment maintenance in the coal mining industry. Diesel equipment and electrical equipment in the underground coal mine environment present many of the same hazards. Paragraph (f) therefore provides for weekly testing and examination of diesel-powered equipment by a person qualified under § 75.1915.

Several commenters stated that the weekly examinations under paragraph (f) should be required only for approved components. Neither the proposed rule nor the final rule contains this limitation. The proposal would have specified that the weekly examinations be conducted in accordance with approved checklists, which are lists developed, with the assistance of MSHA, by an equipment manufacturer who is seeking MSHA approval. The proposal would have required fully assembled machine MSHA approval of all diesel-powered equipment, except for a ''limited class'' of light-duty nonpermissible equipment and stationary unattended equipment. The final rule requires full machine approval only for permissible equipment; nonpermissible equipment must only be provided with an approved engine. MSHA nonetheless believes that certain machine features, although not subject to MSHA approval, should be inspected as part of the regular examination.

Paragraph (f)(1) requires that examinations and tests be conducted in accordance with approved checklists and manufacturers' maintenance manuals. These checklists are to be used in conjunction with checklists and instructions included in manufacturers' maintenance manuals.

Commenters supported the use of checklists for examinations and tests of diesel-powered equipment. One commenter advocated that maintenance requirements be stated in general terms to accommodate new equipment design and improved technology in the future. MSHA agrees with this comment, and the use of equipment-specific permissibility/approval checklists and equipment manufacturers' maintenance manuals should achieve this result. MSHA would also consider a mine operator to be in compliance with this provision if the operator developed its own checklist format based on and consistent with the manufacturers' maintenance manuals.

Equipment manufacturers, with the assistance of MSHA, currently develop such checklists as part of the MSHA approval process. These checklists are designed to provide specific guidance to mine operators in verifying that approved equipment is in approved condition. Permissibility checklists are used to determine whether maintenance or repair is needed to bring the equipment back into approved condition; manufacturers' maintenance manuals complement these checklists by providing mine operators with specific instructions on how to conduct the necessary maintenance or repair. MSHA intends that the approved checklists referred to in this paragraph for diesel-powered equipment under part 7 will be similar to the permissibility checklists used for part 36-approved machines.

Commenters supported the use of checklists for examinations and tests of diesel-powered equipment. One commenter advocated that equipment maintenance requirements be stated in general terms to accommodate new equipment design and future technological improvements. MSHA believes that the use of equipment-specific permissibility/approval checklists should achieve this result, and has included language in the final rule that provides for the use of equipment-specific manufacturers' maintenance manuals in conjunction with the approved checklists in conducting necessary maintenance. MSHA would also consider a mine operator to be in compliance with this provision if operators developed their own checklist formats based on and consistent with the manufacturer's maintenance manuals.

Paragraph (f)(2) requires that persons performing weekly examinations and tests of diesel-powered equipment under this paragraph shall make a record when the equipment is not in approved or safe condition. The record must include the equipment that is not in approved or safe condition, the defect found, and the corrective action taken. This requirement has been adopted with modification from the proposed rule. Under the proposed rule, a record of all weekly equipment examinations would have been required, and recordkeeping

would not have been limited to those examinations that disclosed a defect. Under the final rule the recordkeeping burden has been reduced, consistent with efforts to reduce the paperwork burdens placed on the regulated public.

Commenters generally supported the concept of recording of examinations, and a number of commenters provided information on the type of records of equipment examination that were maintained at their mines. The record required by this paragraph may be entered or recorded by the qualified person who performed the examination, or by a responsible mine official, such as a foreman or superintendent.

Paragraph (g) requires the mine operator to develop and implement written standard operating procedures for weekly testing and evaluation of undiluted exhaust emissions from diesel-powered equipment used where permissible electrical equipment is required, and from heavy-duty diesel-powered equipment as defined in § 75.1908(a), in use underground. The paragraph also requires that specific aspects of the testing and evaluation process be addressed in the procedures. The final rule differs from the proposal in that the proposal would have required emission testing of all diesel-powered equipment underground, while the final rule narrows the requirement for such testing to permissible and heavy-duty nonpermissible equipment. The final rule also differs slightly from the proposal in the type of training required for the person who tests and evaluates the exhaust emissions.

The proposed emission testing requirements elicited the most controversy among commenters of all of the requirements in this section. Some commenters acknowledged that emission testing could be useful in monitoring the general operating condition of a diesel engine in identifying diesel equipment that needs maintenance. These commenters nonetheless expressed serious concern that a standardized in-mine test for undiluted exhaust emissions had not yet been devised, and until such a test was developed there would be no consistency in test results. These commenters recommended that emission test requirements not be included in the final rule. In response to these comments, the final rule limits required undiluted exhaust emission testing to permissible equipment and to heavy-duty nonpermissible equipment, as defined under § 75.1908(a). In-mine tests for diesel exhaust emissions have in fact been developed for these types of equipment. Permissible equipment and heavy-duty nonpermissible equipment are also typically the types of equipment that operate under load for extended periods of time, and consequently generate high levels of emissions relative to other types of equipment. Regular testing of the exhaust emissions of this equipment will help to ensure that this equipment is properly maintained.

A number of commenters supplied extensive information on emissions tests that had been developed and were being conducted at their mine, stating that such tests provided a valuable indication of engines that were in need of maintenance. Some commenters who supported the requirement for emissions testing in the proposed rule nonetheless recommended different testing intervals, ranging from two times per shift to once a month. One commenter stated that an emissions test frequency of one time per month was appropriate for light-duty equipment, while another commenter recommended that emissions be tested each week by a person qualified under § 75.1915, and during each shift by the equipment operator. The final rule adopts the proposed requirement for weekly exhaust emissions testing, consistent with the weekly examinations and testing requirement of paragraph (f). A weekly testing interval is of sufficient frequency to ensure that deteriorating engines are identified and serviced before they create a potential health hazard for miners in the area.

A number of commenters questioned where the exhaust gas should be sampled, some stating that they sampled diluted exhaust gas either in the equipment operator's compartment or at a significant distance from the tailpipe, such as 2 or 3 feet, and in one case 10 feet away. Several commenters stated that emissions test should be taken no more than 3 inches from the exhaust pipe if a particulate probe is not provided, because greater distances will not provide meaningful results. One commenter found that testing 2 feet away from the exhaust was very unreliable, and that the test results would depend on which way the machine was facing. Another commenter believed that test procedures used by some mine operators were intended to circumvent the goal of testing, which is to gauge engine performance and identify equipment that needs maintenance. Other commenters stated that while samples taken in the operator's compartment or away from the tailpipe can provide valuable information, inconsistent dilution prevents such samples from giving the most accurate indication of engine condition. One commenter's experience has shown that samples taken directly from the exhaust tailpipe provide a more accurate analysis of engine performance, and that samples drawn further away are influenced too much by the variables of mine ventilation. MSHA agrees with the commenters who are concerned about these variables, not least among them mine ventilation, that can dilute and distort emission samples that are taken any distance away from the machine tailpipe. A significantly diluted sample may fail to indicate declining engine performance and may not trigger the necessary corrective maintenance, thereby exposing miners to unhealthy levels of gaseous emissions. In response to these concerns, MSHA has concluded that adopting the requirement in the proposal for sampling of the undiluted exhaust emissions is the best way to ensure that the measurements will provide an accurate indication of deteriorating engine performance. The final rule specifically requires the testing of undiluted exhaust emissions, which means that emission samples required must be taken directly from the tailpipe, not at any distance away.

Paragraph (g) specifies that the person performing the weekly testing and evaluation of exhaust emissions be trained to perform the task. The person is not required to be qualified under § 75.1915, but does have to be adequately trained. This is a slight modification from the proposed rule, which would have required the person conducting emissions tests to demonstrate to a person qualified under § 75.1915 the capability to perform the tests. MSHA has concluded that the requirement in the proposed rule that the training be conducted by a qualified person is an unnecessary limitation. Mine operators have the responsibility of ensuring that persons who perform such tasks are adequately instructed in the activity. An important part of carrying out that responsibility is making sure that the persons conducting task training have the requisite knowledge and experience. Accordingly, the final rule simply requires that persons who test and evaluate emissions receive the necessary task training.

Paragraph (g)(1) requires that the emissions testing procedures developed by the mine operator include a method for achieving a repeatable loaded engine operating condition for each type of equipment, and is identical to what was proposed. Most commenters stated that a loaded engine test was not feasible for all types of equipment, specifically diesel machines equipped with clutches. Several commenters emphasized the difficulty of analyzing

the exhaust emissions of a loaded engine without exposing miners to the danger of sudden equipment movement. Other commenters stated that valid samples could not be obtained if the engine were not under load. In response to these commenters, and as discussed above, the final rule limits the requirement for exhaust testing to permissible equipment and heavy-duty nonpermissible equipment. These types of equipment are generally not equipped with clutched transmissions, and therefore do not present the problems identified by commenters that would exist with loaded engine tests for diesel equipment with clutches. As mentioned earlier, MSHA has developed loaded engine test procedures for the equipment subject to testing under the final rule.

Paragraph (g)(2) requires that the procedures for weekly testing and evaluation of the undiluted exhaust emissions of diesel engines specify sampling and analytical methods that include calibration of instrumentation capable of accurately detecting carbon monoxide in the expected concentrations. Commenters indicated that instruments are available and currently being used for accurate emissions testing. Several commenters stated that testing should not be limited to carbon monoxide, stating that they were currently testing for other gases, such as sulfur dioxide and the oxides of nitrogen. Other commenters were of the opinion that carbon monoxide concentrations were the best indicator of engine performance.

After consideration of all comments, MSHA has concluded that sampling for carbon monoxide alone is sufficient for determining a change in engine performance that may reflect a need for maintenance. Data indicates that carbon monoxide increases the most among the exhaust gases when an engine is poorly maintained, and is the best indicator that an engine needs attention. See, Report of the Bureau of Mines, U.S. Department of the Interior, ''Relationship of Underground Diesel Engine Maintenance to Emissions'' (December 1983). Sampling for nitrogen dioxide is required by § 70.1900 of the final rule. This will ensure that miners are not exposed to contaminants at levels above the applicable limits.

Paragraph (g)(3) requires that the procedures for emissions testing and evaluation include evaluation and interpretation of the emission test results. Commenters generally supported this requirement, and several commenters provided information on their evaluation and interpretation of results. This provision has been adopted unchanged from the proposed rule.

Paragraph (g)(4), like the proposal, requires that the testing procedures developed by the operator specify the concentration or changes in concentration of carbon monoxide that will indicate a change in engine performance. The paragraph also provides that concentrations of carbon monoxide shall not exceed 2500 parts per million, which is the limit for carbon monoxide established in the test procedures for Category B engines in subpart E of part 7 of the final rule. This aspect of the proposal received little comment, and has been adopted without change in the final rule.

Paragraph (g)(5) requires that the testing and evaluation procedures address the maintenance of records that are necessary to track engine performance. Commenters supported this requirement and indicated that some mines are already maintaining emissions records. The proposed rule would have required that the procedures address ''maintenance and retention of necessary records''. MSHA has added language to this paragraph to eliminate any ambiguity that might have been created by the term ''necessary records'', by specifying the purpose of the records required under this paragraph. MSHA has also eliminated the reference in the proposed rule to the ''retention'' of records, and has chosen instead to address retention of records in a new paragraph (h) in this section, discussed below.

Paragraphs (h)(1) and (h)(2) provide that records required by paragraphs (f)(2) and (g)(5) of this section must be recorded in a secure book that is not susceptible to alteration, or recorded electronically in a computer system that is secure and not susceptible to alteration. The records must be retained at a surface location for at least 1 year and made available for inspection by an authorized representative of the Secretary and by miners' representatives.

The proposed rule did not address the availability of or access to records under this section. One commenter recommended that records of weekly examination be accessible to miners' representatives. MSHA agrees with this comment, and has revised the paragraph to provide miners' representatives with access to records. The final rule also requires such access for authorized representatives of the Secretary, to allow MSHA inspectors to review records to verify that examinations and tests required under this section have been conducted.

The final rule does not specify a particular way of making records, only that they are to be recorded in a manner that is not susceptible to alteration. A detailed discussion on the issue of recordkeeping and electronic records can be found under ''Recordkeeping Requirements'' in the General Discussion section of this preamble.

The proposed rule would have required that the emission testing procedures under paragraph (g) include the designation of training of the individual who performs the tests. This requirement has not been adopted in the final rule. Instead, as discussed earlier, the rule imposes a performance-based requirement that emissions testing and evaluation under this paragraph be conducted by a person who has been trained to perform the task. Mine operators are consequently responsible for ensuring that individuals who test and evaluate emissions receive the training necessary to ensure their competence. The ability of these persons to discharge their responsibilities is of much greater concern to MSHA than the training they receive to achieve it, and the final rule reflects this emphasis.

Finally, several commenters recommended that this section include a requirement for regular examination of fire suppression systems. Examination of fire suppression systems is not addressed here, but instead is dealt with in § 75.1911 of the final rule, which provides that equipment fire suppression systems be visually inspected at least once each week, and be tested and maintained in accordance with the manufacturer's recommended inspection and maintenance program.

Paragraph (i) provides that diesel-powered equipment must be maintained in accordance with this part beginning 12 months after the date of publication of the final rule. This time is allowed for the development of a training and qualification program under § 75.1915 and for the training of individuals who perform work on diesel-powered equipment. MSHA recognizes that the resources available for training in particular geographical areas may be limited in some cases, and that competent trainers may be in significant demand as mine operators prepare to comply with the requirements of the final rule. A one-year delayed effective date for the requirements of this section should afford the mining community sufficient time to prepare for compliance.

Section 75.1915 Training And Qualification Of Persons Working On Diesel-Powered Equipment

This section of the final rule requires a training and qualification program for persons who perform maintenance, repairs, examinations and tests on diesel-powered equipment, as required by § 75.1914. These critical tasks must be performed correctly for diesel equipment to be maintained in safe condition with acceptable levels of emissions. The final rule sets minimum, performance-based requirements for training and qualification programs, and requires successful completion of such a program for a person to be qualified to perform diesel maintenance, repairs, examinations, and tests.

The final rule differs from the proposed rule in several respects: it does not require the training and qualification programs to be approved by MSHA; it does not specify an interval for retraining; it clarifies that the rule does not require MSHA approval of instructors who provide training; and it eliminates the use of the term ''diesel mechanic''.

Paragraph (a) of this section of the final rule provides that in order to be qualified to perform maintenance, repairs, examinations, and tests on diesel-powered equipment, as required by § 75.1914, a person must complete a training and qualification program which meets the requirements of the section. A qualified person is required to be retrained when necessary to maintain the ability to perform all assigned maintenance, repairs, examinations, and tests. The final rule does not require, as would have the proposed rule, that MSHA approve training and qualification programs developed under this section.

Although there was virtually universal agreement among commenters that some form of training was essential for persons working on diesel equipment, commenters disagreed about the need for a formal training and qualification program and the necessity of MSHA review and approval of such programs. Some commenters were of the opinion that persons working on diesel equipment should be formally qualified, and that diesel training programs for qualification should meet strict minimum standards and be subject to approval by MSHA. One commenter stated that if strict training requirements were not included in the standard, the necessary training would not be provided.

Other commenters opposed requiring a formal program with specific requirements, advocating as an alternative performance-oriented standards that could be adapted to a mine's specific needs. One commenter stated that a formal qualification scheme was unnecessary, and that diesel maintenance training should be provided on an as-needed basis in the same manner as task training under part 48. Another commenter maintained that the benefits realized from a formal qualification program would not justify the additional administrative burdens of such a program. The Office of Management and Budget guidance comments directed MSHA to reexamine whether all of the information proposed to be submitted to MSHA for approval of training and qualification programs had practical utility and imposed the least burden on mine operators.

Numerous other commenters, while supporting the establishment of procedures to qualify persons to perform work on diesel equipment, were opposed to the proposed requirement that MSHA approve training and qualification programs. Many commenters indicated that very good diesel equipment maintenance training is already being provided by mine operators as well as equipment manufacturers, without MSHA review or approval. In contrast, other commenters maintained that training programs should meet the approval of all interested parties, including MSHA and the representative of miners, to ensure that the training is adequate. The Diesel Advisory Committee had unanimously recommended that MSHA require persons performing work on approved diesel equipment features be trained and tested for competency, and that the training and testing be approved by MSHA.

After careful consideration of all of these views and comments, MSHA has concluded that a basic structure for training and qualification programs for persons performing certain work on diesel equipment is necessary. Properly trained persons are fundamental to adequate maintenance of diesel-powered equipment. To meet this objective, MSHA believes minimum criteria for the training and qualification of these persons are essential. Paragraph (a) therefore provides that to be qualified to perform diesel equipment maintenance, repairs, examinations, and tests, as required by § 75.1914, a person must successfully complete a training and qualification program meeting the requirements of the section.

The proposal that MSHA review and approve training and qualification programs is not adopted in the final rule. MSHA's paper review of training and qualification programs, as proposed, could provide an initial check of the quality of the program. Such a review would not, however, ensure that the program is successful in its implementation. Rather than expending Agency resources on the review and approval of diesel training programs, MSHA will direct those resources toward verification of the effectiveness of training and qualification programs in their execution. Similarly, mine operators and training providers can focus on the development and administration of their training and qualification programs rather than on procedures to gain MSHA approval. The rulemaking record contains a number of well-designed diesel training plans already in effect, demonstrating that the mining community has the expertise needed to develop and implement effective training programs. MSHA will closely monitor the effectiveness of the training programs implemented under this section.

Paragraph (a) also requires retraining when needed. The proposed rule would have required qualified persons to undergo retraining every 12 months. Some commenters to the proposed rule opposed the establishment of a specific requirement for annual retraining, stating that the mining industry needed performance-oriented standards that could be adapted to mine-specific needs for maintenance and training. Other commenters stated that an annual retraining requirement was necessary to ensure that persons working on diesel-powered equipment maintained the necessary knowledge and expertise over time.

MSHA considers retraining to be an important part of any training program. The final rule, however, does not mandate retraining at specified intervals. MSHA has concluded that mine operators should tailor the frequency of retraining to the conditions and practices at each mine, to ensure that all persons who work on diesel-powered equipment maintain the requisite level of expertise. Factors that could affect the timing of retraining include the frequency with which the qualified person works on specific pieces of diesel equipment; newly developed techniques for performing the required inspections and tests; and any modifications that may have been made to the equipment since the last training. Frequent retraining may be necessary at some mines to ensure that qualified persons retain sufficient skill and knowledge to perform their jobs effectively. At other mines where conditions are less changeable, retraining at greater intervals may be appropriate.

Paragraph (a) of the final rule also eliminates the term ''diesel mechanic'', was used in the proposal to identify those persons qualified to perform maintenance and repairs of approved features of diesel equipment. Many commenters to the proposed rule objected to the use of the term, stating that it would result in the creation of a new job title or classification. MSHA did not intend to establish a new job classification through the use of the term ''diesel mechanic'', and concludes from the comments that its use would result in confusion. The term ''diesel mechanic'' has therefore not been adopted in the final rule.

Finally, the phrase ''examinations and tests'' has been included in paragraph (a) of the final rule, reflecting that a person qualified under this section would be authorized to conduct weekly examinations and tests of diesel-powered equipment under § 75.1914(f), in addition to maintenance and repairs of such equipment under § 75.1914(b).

Paragraph (b) provides a basic structure for training and qualification programs, but is intended at the same time to provide mine operators with sufficient latitude in developing their programs. MSHA believes that training and qualification programs will be most effective if they are tailored to specific mining conditions and equipment in use at the mine, as well as to the skill levels and experience of the persons being trained.

A number of commenters reported that they already have training and qualification programs in place at their mines, and provided descriptions and documentation of these programs. Many of these programs utilize training at off-site facilities, such as community colleges and technical and trade schools. Commenters also indicated that mining equipment manufacturers are typically called upon to provide training. These programs generally include classroom training modules as well as hands-on in-mine training on specific pieces of equipment. Commenters stated that the duration of training programs could be from three days to eight weeks. The length of the program was generally dependent upon how much diesel-powered equipment was used at the mine, as well as on the previous experience and skill level of the persons being trained.

MSHA anticipates that local community colleges and technical schools will assist mine operators in developing the training and qualification programs required under this section. Commenters indicated that this type of assistance is already being provided to mine operators in a number of areas of the country.

Paragraph (b)(1) requires that training courses be presented by a competent instructor, in contrast to the proposed rule, which would have required that courses for training and retraining be conducted by either a qualified diesel mechanic or ''other instructor determined by MSHA to be qualified.'' Several commenters objected to this aspect of the proposal, based on their belief that the proposal required some type of formal approval by MSHA before anyone other than a qualified person could conduct diesel training under this section. A number of other commenters believed that such approval would only add an unnecessary procedural hurdle to providing training. Contrary to the understanding of such commenters, MSHA did not intend by the proposal to approve training instructors. The language of the final rule has been clarified to provide that courses may be presented by a competent instructor. A competent instructor under paragraph (b)(1) could be a person qualified under § 75.1915, an instructor from a trade school or college, or a person experienced in diesel maintenance, such as a representative of an equipment or engine manufacturer, or even the chief of maintenance at the mine, provided that the instructor has the necessary technical expertise.

Paragraph (b)(2) of the final rule provides that the training and qualification program must be sufficient to prepare or update a person's ability to perform all assigned tasks with respect to diesel-powered equipment maintenance, repairs, examinations, and tests. This paragraph incorporates the requirements of proposed paragraphs (e)(2) and (e)(3), except that it substitutes the term ''person'' for the term ''diesel mechanic,'' for the reasons stated in the discussion of paragraph (a) of this section. Several commenters were opposed to the requirement in proposed paragraph (e)(3) that courses in the training program address each piece of diesel-powered equipment in use at the mine, stating that this could be an unnecessary burden at mines that operate a variety of types of diesel-powered equipment. These commenters stated that if an individual never worked on certain pieces of equipment, requiring that individual to receive training on all equipment in use at the mine would be unnecessary.

MSHA did not intend proposed paragraph (e)(3) to require that each qualified person be trained on all types of diesel-powered equipment in use in the mine, only those pieces of diesel-powered equipment the qualified person actually works on. However, the language of proposed paragraph (e)(3) could be interpreted to require that the courses in the training program cover all pieces of diesel equipment in use at the mine.

MSHA agrees with the commenters that training should be tailored to the duties and responsibilities of the individual qualified person. The language in the final rule has therefore been clarified to reflect this concept. A qualified person is not required to be trained on a particular type of equipment, unless he or she performs work on it. However, a person who is untrained on a particular type of equipment is not a qualified person with respect to that equipment, and may not perform maintenance, repairs, and tests required to be conducted by a qualified person. Finally, MSHA anticipates that training will address equipment by model and not by individual machine, unless machines at the mine with the same model number differ because of field changes or other special features. In such cases training would need to take into account any significant differences among machines.

While MSHA's intent is to promote flexibility in the implementation of training and qualification programs, the final rule does specify minimum topics of instruction for these programs. Paragraphs (b)(3)(i) through (b)(3)(vii) of the final rule set forth the specific areas of instruction that must be covered by a training and qualification program. Commenters were generally in agreement with the areas of instruction required under the proposed rule, and the language of the final rule is virtually the same as what was proposed''.

Paragraph (b)(3)(i) requires that training programs address the ''requirements of subpart T of this part''. Several commenters recommended that the phrase ''as applicable'' be added to this requirement, to eliminate the need for training to address requirements that may not be directly applicable at the specific mine. This recommendation is not adopted in the final rule. MSHA believes that a person qualified under this section should have, at a minimum, basic familiarity with the scope of subpart T and the diesel-powered equipment safety standards. However, MSHA does not intend that this aspect of the final rule require exhaustive coverage of requirements that have no application to the mine in question. The well-designed, mine-specific training program contemplated by this section will focus on the requirements that are the most relevant. For example, if a mine does not store diesel fuel underground, qualified persons working

at that mine would not be expected to have extensive knowledge of the requirements of the standards governing fuel storage. Qualified persons should nonetheless be aware that subpart T contains provisions that address underground fuel storage.

Paragraph (b)(3)(ii) is virtually identical to proposed paragraph (e)(4)(ii), and requires that the training program address the use of power package or machine checklists to conduct tests to ensure that diesel equipment is in approved and safe condition, with acceptable emission levels. Some commenters reported that maintenance of the permissibility features of approved equipment was often neglected, and emphasized the importance of using only trained personnel to evaluate these features. This requirement is intended to ensure that training addresses the evaluation of the equipment's permissibility features. Several commenters also questioned the meaning of the term ''safe operating condition''. The term has been changed to ''safe condition'' to conform to the terminology in § 75.1914. MSHA intends that ''safe condition'' used in this paragraph means that the equipment has been maintained in compliance with subpart T of this part and does not present a hazard to miners. Finally, the language of this paragraph has been slightly revised to delete the term ''appropriate'' from the phrase ''to conduct appropriate tests'', because it is unnecessary and redundant.

Paragraph (b)(3)(iii) of this section is identical to proposed paragraph (e)(4)(iii), and requires that the training program cover the proper maintenance of approved features and the correct use of appropriate maintenance manuals, including machine adjustments, service, and assembly. Paragraph (b)(3)(iii) is different from paragraph (b)(3)(ii) in that it addresses proper maintenance of equipment, while paragraph (b)(3)(ii) addresses tests to ensure permissibility.

Paragraph (b)(3)(iv) of the final rule requires that training under this section address tests and maintenance of fire suppression system on diesel-powered equipment. The final rule uses the phrase ''fire suppression system'' rather than ''fire protection system,'' which was used in the proposed rule, to conform the language of the final rule to terminology that is more commonly in use. The purpose of this requirement is to ensure that a qualified person has sufficient familiarity with the elements of fire suppression systems used on diesel equipment.

Paragraph (b)(3)(v) of this section requires that fire and ignition sources and their control and elimination, including cleaning the equipment, be addressed by the training program. The phrase ''including cleaning of the equipment'' has been added in response to comments emphasizing the importance of frequent cleaning of equipment to prevent the accumulation of combustible materials such as oil, grease and float coal dust and thereby reduce the risk of fire. This requirement is consistent with and is intended to reinforce compliance with § 75.400, which has been revised in this final rule to specifically prohibit accumulations of combustible material on diesel-powered equipment.

Paragraph (b)(3)(vi) of this section requires that the training program address safe fueling procedures and maintenance of the equipment's fuel system. The importance of proper refueling procedures is illustrated by the analysis of the Canadian fire accident data in the discussion of § 75.1908. These data show that the failure to follow proper refueling procedures resulted in several fires.

Paragraph (b)(3)(vii), like the proposal, requires that the training program address maintenance and testing of the engine's intake air system. A number of commenters reported that failure to replace dirty intake air filters was the most frequent cause of excessive levels of smoke and carbon monoxide from otherwise properly adjusted engines.

Proposed paragraph (e)(4)(viii) would have required the training course to address tests and maintenance of the engine shutdown device. Because engine shutdown devices are in fact components of permissible equipment, training covering these devices will already be required by paragraphs (b)(3)(ii) and (iii) of this section, discussed above. The language of proposed paragraph (e)(4)(viii) has therefore not been included in the final rule.

Proposed paragraph (e)(4)(ix) would have given the district manager the authority to require the training program to cover additional subjects necessary to address specific health and safety needs. This provision has not been adopted in the final rule, which is designed to be more performance-oriented. As discussed above, the requirements of this section are intended to result in the development of training programs that are tailored to the specific needs of each mine, including the equipment being used and the skill levels of the persons receiving the training. Failure to address mine-specific health and safety needs in the training program may result in MSHA determining that a mine operator is not in compliance with § 75.1915. Additionally, the proposed rule would have required MSHA approval of training programs and would have provided a framework for the exercise of district manager authority under proposed paragraph (e)(4)(ix). As discussed above, the final rule does not require MSHA approval of training programs. For these reasons, this proposed provision has not been adopted in the final rule.

Paragraph (b)(4) requires the training and qualification program to include an examination that requires demonstration of the ability to perform all assigned tasks with respect to diesel equipment maintenance, repairs, examinations, and tests. There is no specific requirement that the examination be in writing, although an examination that effectively assesses competence will most likely include a written test as well as a practical portion that allows a hands-on evaluation of a person's abilities. Under the proposed rule, a minimum score of 80 percent would have been required on any written portion of a qualification examination. Although some commenters supported the concept, MSHA has concluded that mandating a minimum score is unnecessary when a written portion is not a required part of the examination. Further, such a specific requirement is at odds with the performance-oriented approach of this paragraph. The requirement for a minimum score has therefore been omitted from the final rule.

Paragraph (b)(5) requires that the training and qualification program be in writing, and contain a description of the course content, materials, and teaching methods to be used for initial training and retraining. The language of this paragraph is substantially the same as proposed paragraph (d)(1), except that the word ''approved'' has been omitted. As discussed above, the program will not be subject to MSHA approval under the final rule.

The requirements of proposed paragraphs (d)(2) and (d)(3) have not been adopted in the final rule. Specifically, proposed paragraph (d)(2) would have required that the training and qualification program include a copy of the examination, to allow MSHA to review the examination as part of the approval process. Because the final rule does not require MSHA approval, and also because a written examination is not required, a copy of the examination does not need to be included as part of the program.

Proposed paragraph (d)(3) would have required that the program include a description of the evaluation program to be used for retraining to assess the knowledge, skills, and ability of the

qualified person. This requirement has not been included in the final rule, consistent with MSHA's intention to measure the effectiveness of training and qualification programs by how well diesel-powered equipment is being maintained at the mine, rather than by the adequacy of a written program. Consequently, the final rule does not require a retraining evaluation program, but MSHA expects that mine operators will closely monitor the maintenance of diesel equipment at their mines, and will ensure that qualified persons receive the necessary retraining.

Paragraph (c) of this section requires the mine operator to maintain a copy of the training and qualification program required by this section and a record of the names of all persons qualified under the program. Paragraph (c)(1) requires that the record of the names of qualified persons be made in a manner that is not susceptible to alteration or recorded electronically in a computer system that is secure and not susceptible to alteration. Under paragraph (c)(2), the training and qualification program and the record of qualified persons must be kept at a surface location of the mine and made available for inspection by an authorized representative of the Secretary and by miners' representatives. Paragraph (c) incorporates, with certain revisions, the requirements originally proposed in §§ 75.1916 (i) and (j). Proposed §§ 75.1916 (i) and (j) would have required a list of current instructors also to be included in the training and qualification program and, in addition to the names of all qualified persons, the dates of qualification and the date of the last retraining. MSHA has removed these additional recordkeeping requirements from the final rule, consistent with the Agency's intention to gauge the adequacy of training and retraining by how effectively diesel-powered equipment at the mine is maintained. The final rule does not specify a particular method for maintaining the record of qualified persons, only that it is not susceptible to alteration. A detailed discussion of recordkeeping and electronic records can be found under the heading ''Recordkeeping Requirements'' in the General Discussion section of this preamble.

Finally, the proposed rule specified procedures in § 75.1916 for MSHA's administration of training and qualification programs. Among other things, the proposed rule set forth a process for MSHA review and approval of the training and qualification program required under § 75.1915, and established procedures for the revocation of individual qualifications. Because MSHA will not be formally reviewing and approving training and qualification programs, procedural requirements for review and approval are unnecessary. Consequently, the provisions proposed in § 75.1916 have not been retained in the final rule, with the exception of the requirements of proposed §§ 75.1916(i) and (j), as discussed above.

Section 75.1916 Operation Of Diesel-Powered Equipment

Section 75.1916 addresses speed limits and other traffic restriction on roadways in underground coal mines where diesel-powered equipment is operated. This section also prohibits unnecessary idling of diesel-powered equipment, as well as the operation of unattended diesel-powered equipment.

The Diesel Advisory Committee advocated MSHA regulation of operating conditions of diesel-powered equipment, recommending proposal of a rule that addressed speed limits, road conditions, and operator control of vehicles. This section is intended to ensure that diesel-powered equipment underground is operated in a safe manner, and requires that operating speeds of diesel-powered equipment be consistent with conditions in the mine, and that operators of diesel-powered equipment maintain full control of the equipment when it is in motion. Standardized traffic rules, including speed, signals, and warning signs, are required to be established at each mine and followed.

The final rule recognizes that the safe operating speed for a particular piece of diesel-powered equipment depends greatly on the specific mining conditions and the type of equipment being operated, and as a result the final rule does not establish a universal speed limit for diesel-powered equipment operated in underground coal mines. Finally, idling of mobile diesel-powered equipment is prohibited, except as required in normal mining operations. Operation of unattended diesel-powered equipment is also prohibited under this section.

Several commenters recommended elimination of the requirements of this section, stating that the proposed standards were too vague and could result in inconsistent enforcement. Some of these commenters suggested reducing the proposed requirements of this section to a single requirement that the mine operator establish traffic rules, appropriate for the specific mine conditions at each mine, that address speed and operator control of equipment. A number of commenters also pointed out that existing § 75.1403 gives MSHA the authority to regulate hazards arising from the transportation of men and materials at underground coal mines. These commenters believed that transportation hazards were already adequately covered under § 75.1403, and that additional regulation was therefore unnecessary.

The existing authority to issue safeguards under § 75.1403 does not make the requirements of this section unnecessary. Section 75.1403 authorizes an MSHA inspector to issue a ''safeguard notice'' when the inspector determines that a transportation hazard exists at a mine and the hazard is not already addressed by a mandatory standard. The ''safeguard notice'', issued by an MSHA inspector to the mine operator, identifies the nature of the hazard and establishes requirements based on the actual conditions or practices that constitute a transportation hazard at the particular mine. After the mine operator is given a reasonable time to come into compliance with the requirements set forth in the safeguard notice, the safeguard has the force and effect of a mandatory standard at the mine and can be enforced as such. Sections 75.1403–1 through 75.1403–11 contain criteria to guide inspectors in issuing safeguards, covering a wide range of potential transportation hazards, such as clearance distances on belt conveyors and track haulage roads, brakes on hoists and elevators, and safety gates for entrances to shafts and slopes.

Safeguards are not a substitute for the mandatory requirements in § 75.1916. Although some of the topics covered in this section, such as speed limits and roadway conditions, are included as safeguard criteria in §§ 75.1403–1 through 75.1403–11, the criteria are not enforceable unless and until they have been incorporated in a safeguard notice, after an MSHA inspector has determined that a hazard exists. In contrast, the requirements of this section of the final rule apply at all underground coal mines where diesel-powered equipment is used. In addition, safeguard criteria are intended to be tailored to the unique conditions and practices at an individual mine, while the requirements in this section are general in nature, although mine operators are given the flexibility to set traffic rules appropriate for the conditions at their mines. The final rule therefore does not reflect the opinion of some commenters that the requirements under this section are unnecessary.

The requirements of this section specifically govern the manner and conditions under which diesel-powered

equipment operates in underground coal mines, and recognize that diesel-powered equipment tends to be much larger and more powerful, and to have the ability to travel at much greater speeds than electric-powered equipment. Some types of diesel-powered equipment used in underground coal mines, such as pickup trucks, are designed for use on highways, and can travel at speeds in excess of 60 miles per hour (mph). In comparison, a typical piece of mobile rubber-tired battery-powered equipment will have a top speed of less than 10 mph. The potential traffic hazards are therefore significantly greater in the operation of diesel-powered equipment, and there is a resulting need for the minimum requirements set by the final rule at mines where diesel-powered equipment is operated.

Paragraph (a) of this section adopts the requirements of the proposal and provides that operating speeds of diesel-powered equipment must be consistent with the type of equipment being operated, the conditions of roadways, grades, clearances, visibility, and other traffic. Under this paragraph diesel-powered equipment must be operated at all times at safe speeds, which in many cases will be slower than the maximum speed limit set in the mine-wide traffic rules established under paragraph (c).

Some commenters recommended that the rule specify a maximum speed limit, such as 15 mph or 25 mph, that would apply at all underground coal mines. These commenters stated that a standardized speed limit would promote compliance because the rules would be the same at all mines everywhere. A few of these commenters recommended that equipment be fitted with gear reduction ratios that would make it mechanically impossible for equipment to be operated at speeds above the limit. Other commenters opposed the establishment of a universal speed limit for all mines, stating that safe speeds were highly dependent on variable mining conditions, and that a speed that is prudent under one set of circumstances could be quite unsafe, even reckless, under another.

The requirements of this paragraph recognize that certain mine conditions and equipment characteristics must be taken into account in determining the speed at which equipment can be safely operated. Mine conditions have been a contributing factor in many traffic accidents. Adverse conditions that can negatively impact equipment safety include steep grades and slippery mine surfaces, which decrease the effectiveness of equipment brakes. Particularly large diesel-powered machines, which can take up nearly an entire mine entry, can present significant limitations in visibility for the equipment operator, whose line of vision is below the machine frame. Consequently, the equipment operator has several large blind spots where other pieces of equipment and mine personnel cannot be seen. Large haulage units operating in the same area as small pieces of diesel-powered equipment can create particularly dangerous traffic patterns. The proposed rule would have required roadways to be kept as free as practicable from bottom irregularities or other conditions that could affect control of the equipment. A number of commenters recommended elimination of this paragraph, noting that the proposed rule would require standardized traffic rules and could be used to address concerns about roadway conditions. Other commenters supported this proposed requirement, citing the dangers that can result from poorly maintained roads.

Although MSHA agrees that keeping mine roads free from bottom irregularities, debris, and wet or muddy conditions is important to safe operation of diesel-powered equipment, the requirements of paragraphs (a), (b), and (c) of this section of the final rule are sufficient to address concerns about adverse road conditions. The requirements of proposed paragraph (a), which would have required roadway maintenance, have therefore not been adopted in the final rule.

Under the requirements of the final rule, vehicle speed must take into account roadway conditions and other factors that affect safe equipment operation. Equipment operators are required to maintain full control of their equipment, and traffic rules must be established and followed at each mine where diesel-powered equipment is operated.

Paragraph (b) also adopts the requirements of the proposal and provides that equipment operators must maintain control of mobile diesel-powered equipment while it is in motion. Commenters generally supported this requirement, which recognizes that there may be cases where the roadway conditions, posted operating speed, and traffic rules are adequate but other factors interfere with the equipment operator's ability to exercise full control over the equipment. For example, the rule would prohibit the operator from carrying tools or supplies in the operator's compartment that interfere with the operator's ability to control the equipment. Additionally, equipment controls must be free of any debris which could obstruct safe operation. Operator inattention could also constitute a violation of this requirement if the inattention causes unsafe operation of the equipment.

Paragraph (c) requires that standardized traffic rules, including speed limits, signals, and warning signs, be established and followed at each mine. Under this provision, the mine operator must develop mine-wide traffic rules to address hazards arising from the operation of diesel-powered equipment, and ensure that mine employees are aware of the rules and comply with them. This is consistent with the suggestions of several commenters, who supported simplifying the proposed rule requirements by a single provision that mine operators establish safe operating rules appropriate for mine conditions. The requirements in the final rule are similar to those of the proposal, except that the final rule provides that traffic rules must be ''followed'', and does not adopt the proposed requirement that the rules be ''posted.'' Mine operators have the responsibility to take whatever steps are necessary to ensure that their employees are familiar with the mine's traffic rules and follow them. Although posting of traffic rules can serve as a means for mine operators to facilitate compliance, it is not specifically required under the final rule.

Commenters who advocated a standardized maximum speed limit at all underground coal mines, in response to proposed paragraph (b), renewed this recommendation in their comments to this paragraph. For the reasons discussed above, the final rule does not impose a universal speed limit. Some commenters suggested that simply requiring the establishment of a mine-wide speed limit would eliminate the need for other traffic rules. MSHA disagrees that restrictions on speed alone will eliminate potential traffic hazards. The traffic rules required under this paragraph are intended to address other factors that affect safe operation of diesel-powered equipment, such as changes in mining conditions.

Some commenters recommended that MSHA provide criteria for mine operators to use in establishing mine traffic rules, and that operators develop traffic plans, consistent with these criteria, that are reviewed and approved by MSHA. The final rule does not adopt this recommendation. Although MSHA's review of a mine's traffic rules could provide a preliminary check on the adequacy of the rules, such a review will not ensure that they have been effectively implemented. The final rule reflects MSHA's conclusion that both mine operator and Agency resources are

better spent ensuring that traffic rules are being followed. However, if an MSHA inspector determines that an operator's traffic rules fail to adequately address the mine's traffic hazards, MSHA will require revision of the traffic rules.

This paragraph also requires that the traffic rules be followed. The language in the proposed rule did not specifically require that the rules be ''followed,'' although MSHA believes that most commenters understood that the rules must be obeyed. To eliminate any possible ambiguity or misunderstanding, the rule has been clarified to specifically require that the rules be complied with.

One commenter recommended that mine operators be required to investigate and file reports of mine traffic accidents in specific circumstances, such as where an injury occurs or where a certain amount of damage is sustained. MSHA regulations at part 50 already require mine operators to investigate and report certain accidents to MSHA, as well as to report to MSHA all occupational injuries and illnesses. MSHA has concluded that there is no compelling reason why traffic accidents and injuries should be treated differently from other types of mining accidents and injuries. The final rule therefore does not adopt this comment.

Paragraph (d) prohibits idling of mobile diesel-powered equipment, except as required in normal mining operations. This prohibition has been added to the final rule in response to the concerns of some commenters, who observed that engines are excessively idled most frequently in areas where it is impractical to increase air quantities. This results in high levels of exhaust contaminants in these areas of the mine, and increases the risks of miner overexposure. The final rule addresses this problem by prohibiting unnecessary engine idling. The intent of this provision is that equipment parked at any location, including the loading point, will be shut down if it is not being used to do work.

Paragraph (e) has been added to the final rule and prohibits the operation of unattended diesel-powered equipment. The proposal would have prohibited portable limited class equipment from being operated unattended. This prohibition is consistent with the decision not to adopt the proposed requirements for stationary unattended equipment into the final rule, and is explained in detail in the preamble discussion of stationary unattended equipment.

Amendment of Certain Part 75 Standards

MSHA's part 75 sets forth mandatory safety standards for each underground coal mine. The final rule amends existing §§ 75.342, 75.400, 75.1710 and 75.1710–1 to extend their application to diesel-powered equipment, requiring the installation of methane monitors on certain types of diesel-powered equipment, prohibiting accumulation of combustible materials on diesel-powered equipment in active workings of underground coal mines, and requiring diesel-powered face equipment and shuttle cars to be equipped with substantially constructed cabs or canopies. Although these existing standards specifically apply to electric equipment, the hazards that these standards are designed to address are independent of the power source of the equipment.

The requirements of these four mandatory safety standards have applied to electric-powered equipment for a number of years, and have been extremely effective in protecting miners from the hazards of fires, explosions, and roof falls. The Diesel Advisory Committee recommended that MSHA review its existing standards to determine whether any existing safety requirements should be made applicable to diesel-powered equipment.

In the preamble to the proposed rule, MSHA solicited comments on extending the applicability of certain listed standards to diesel-powered equipment. The standards listed in the proposal included § 75.313 (now § 75.342, methane monitors); § 75.400 (accumulation of combustible materials); § 75.400–2 (cleanup programs); §§ 75.523, 75.523–1, and 75.523–2 (emergency deenergization of self-propelled equipment); § 75.1107–1 (fire suppression devices); and §§ 75.1710 and 75.1710–1 (cabs and canopies on face equipment). MSHA also solicited comments on whether any other part 75 standards that were not listed should be made applicable to diesel-powered equipment.

Commenters expressed general support for extending requirements for methane monitors, brakes, and cabs and canopies to diesel-powered equipment. Some commenters expressed the view that all equipment safety features on diesel-powered equipment should be addressed under part 75. One commenter suggested that all requirements in part 75, particularly §§ 75.500 through 75.524 (applicable to battery- and electric-powered equipment), be applied to diesel-powered equipment. Other commenters stated that all necessary equipment safety features should be required as part of the equipment approval process, rather than as standards under part 75.

The final rule retains MSHA's longstanding approach of including in part 75 general equipment safety requirements such as methane monitors, prohibitions against accumulation of combustible materials, and cabs and canopies. The approach of requiring general safety features in part 75 has been effective in protecting miners in underground coal mines where electric-powered equipment is in use. As discussed below, the safety hazards addressed by the standards amended in the final rule are the same regardless of the equipment's power source.

By including these equipment safety requirements in part 75, mine operators will have the flexibility to improve safety by making machine modifications based on specific conditions at each mine. For example, the selection of an appropriate cab or canopy for a machine is dependent on mine height and entry width.

Section 75.342 Methane Monitors.

Methane monitors automatically shut down permissible electric mining equipment used to extract or load coal when methane concentrations around the equipment reach 2.0 percent. Permissible diesel equipment can create the same explosion hazard as permissible electric equipment if operated in the presence of high concentrations of methane. Also, under certain conditions, a diesel engine can ingest methane from the mine atmosphere, resulting in uncontrolled acceleration of the diesel engine during start up or operation, and produce an ignition of methane in the area.

Methane monitors are recognized as a critical link in the safety protections designed to prevent mine explosions. These monitors are normally mounted on equipment that operates in the face area, providing the first warning that methane gas is accumulating in potentially dangerous quantities.

The final rule requires methane monitors on all diesel-powered face cutting machines, continuous miners, longwall face equipment, loading machines, and other diesel-powered equipment used to extract or load coal in the working place. By applying the methane monitor requirements of existing § 75.342 to diesel-powered equipment, miners working around such equipment will be protected from fire and explosion hazards to the same degree as miners working in areas where similar electric-powered equipment is in use.

Section 75.400 Accumulation of Combustible Materials

The final rule requires that coal dust, loose coal, and other combustible materials be cleaned up and not permitted to accumulate in active workings or on electric equipment therein. The hazards of a mine fire or explosion in an underground coal mine are similar for diesel-powered and electric-powered equipment. Coal dust can produce a ready fuel source when combined with the lubricating and hydraulic oils used in diesel-powered equipment and can start a fire if it comes into contact with ignition sources on the equipment. As discussed elsewhere, diesel-powered equipment that is not equipped with surface temperature controls, such as outby equipment, may have engine and exhaust surfaces above the ignition temperature of coal dust. Accumulations of coal dust can also contribute to the propagation and severity of mine fires and explosions. Because diesel equipment uses large quantities of diesel fuel and hydraulic fluid, once a fire starts it can quickly spread due to the close availability of these fuel sources on a diesel machine. A large fire can then ensue and spread in the mine. By adding the term ''diesel-powered'' to § 75.400, MSHA intends that the longstanding prohibition against the accumulation of combustible materials will now be explicitly applied to diesel-powered equipment.

Sections 75.1710 and 75.1710–1—Cabs and Canopies.

The final rule amends § 75.1710 to require diesel-powered face equipment and shuttle cars to be equipped with substantially constructed cabs or canopies to protect miners operating such equipment from roof falls and rib and face rolls. The final rule also applies the installation requirements for cabs and canopies in § 75.1710–1 to diesel-powered equipment.

Cabs and canopies provide very effective protection to equipment operators from the hazards of roof and rib falls and in collisions with the mine roof and ribs. Since 1972, approximately 250 miner fatalities have been prevented by cabs and canopies installed on electric equipment. Some mine operators have recognized the clear safety benefits of cabs and canopies and have installed these devices on the diesel-powered self-propelled face equipment in their mines. By specifically extending the existing requirements in these sections to diesel-powered self-propelled face equipment, including shuttle cars, the operators of all such equipment will be afforded the same protection that is currently provided for operators of electric equipment.

Several standards identified in the proposal as possible subjects for revision have not been amended in this final rule. Section 75.400–2, which requires the establishment of a cleanup program for the removal of accumulations prohibited under § 75.400, has not been specifically amended to include the term ''diesel-powered equipment.'' Existing § 75.400–2 does not make reference to a particular type of equipment, either diesel- or electric-powered. The standard simply requires that a program be established for the cleanup and removal of combustible materials. Therefore, § 75.400–2 already applies to diesel-powered equipment and amending the standard is unnecessary.

MSHA also solicited comments in the proposed rule on whether the requirements of §§ 75.523, 75.523–1 and 75.523–2 should be applied to diesel-powered equipment. These standards protect equipment operators from pinning and crushing injuries by requiring self-propelled electric face equipment to be equipped with panic bars, which quickly deenergize the tramming motors in the event of an emergency. The existing standards do not require panic bars if the equipment is provided with a substantially constructed cab or canopy in accordance with § 75.1710–1, or if other devices approved by MSHA are installed to quickly deenergize the tramming motor in the event of an emergency.

Because §§ 75.523, 75.523–1, and 75.523–2 make specific reference to the interrelationship among electric motors, electrical control components, cabs, emergency parking brakes, and panic bars, these standards cannot be readily adapted to diesel-powered equipment. An MSHA study of diesel-powered face equipment accidents occurring from 1984 to 1995 found that this type of equipment is manufactured with a substantially constructed operator's compartment which provides the same protection as a cab. The study also found no pinning or crushing accidents of the type that would have been prevented by a panic bar on diesel equipment. Since this type of diesel equipment will be evaluated under part 36, the approval process can ensure that the protection features provided on diesel equipment will provide at least the same protection as that provided by a panic bar on electrical equipment. The final rule, therefore, does not amend § 75.523 to require panic bars or the equivalent on diesel-powered equipment.

The proposed rule also solicited comment on the applicability of existing § 75.1107–1, which requires fire suppression devices on certain attended and unattended underground electric equipment, to diesel-powered equipment. The fire hazards presented by diesel-powered equipment are different from those on electric-powered equipment, due to the close proximity of large quantities of hydraulic oils and fuels to the heated diesel engine exhaust. Because effective fire suppression systems are essential for the safe operation of diesel-powered equipment, specific requirements for fire suppression systems on diesel-powered equipment are addressed in the final rule at § 75.1911.

Derivation Table

The following table lists final standard section numbers and corresponding section numbers of existing standards from which they are derived.

New sections	Existing sections
Part 7—Subpart E	New, Parts 7, 32, 36
7.81	New
7.82	New, 36.2, 7.2
7.83	New, 36.6, 7.3
7.84	New, 32.4(f), 36.26(b), 36.44, 75.322
7.85 through 7.87	New
7.88	New, 75.322
7.89	New
7.90	New, 36.11
7.91 and 7.92	New
Part 7—Subpart F	New, Parts 7, 18, 36
7.95	New
7.96	New, 36.2, 7.2
7.97	New, 36.6, 7.3
7.98	New, Part 36—Subpart B
7.99	New
7.100 and 7.101	New, 36.46
7.102 and 7.103	New, 36.47
7.104	New, 36.46
7.105	New, 7.6, 36.11
7.106	New, 7.8(b)
7.107	New, 7.52
7.108 and 7.109	New
Part 36	Partly new, Part 31
36.1	Partly new
36.2(e)	Partly new
36.2(f)	Partly new, 36.2(h)
36.6 (b)(2) through (b)(4).	Partly new
36.9(a)	Partly new
36.20(b)	Partly new
36.20(c)	New
36.21	Partly new
36.43(a)	Partly new
36.48(b)	Partly new
70.1900(a)	New, 75.100, 75.362
70.1900 (a)(1) through (b)(3).	New
70.1900(c)	New, 75.322, 75.325(j)

New sections	Existing sections
70.1900(d)	New, 75.363
70.1900 (d)(1) through (e).	New
75.325 (f) through (h)	New, Part 32
75.325 (i) and (j)	New, Part 32, 75.322
75.325(k)	New, Part 32, 75.371
75.342 (b)(2) and (c)	Partly new
75.360(b)(7)	Partly new
75.371(r)	Partly new
75.371 (kk) through (oo).	New
75.371(pp)	New, 75.322
75.400	Partly new
75.1710 and 75.1710–1.	Partly new
Part 75—Subpart T	New, Part 32
75.1900	New, 75.301
75.1901(a)	New, 36.2(i)
75.1901(b)	New
75.1901(c)	New, 40 CFR 79
75.1902	New
75.1903(a)(1)	New, 75.301, 75.340
75.1903 (a)(2) and (a)(3).	New
75.1903(a)(4)	New, 75.333(e), 75.340
75.1903 (a)(5) through (a)(7).	New
75.1903(b)(1)	New, 75.1100–2(f)
75.1903 (b)(2) through (d)(6).	New
75.1904	New
75.1905	New
75.1906 (a) through (f).	New
75.1906(g)	New, 75.1107–3 through 75.1107–6, 75.1107–8 through 75.1107–16
75.1906 (h) and (i)	New
75.1906(j)	New, 75.1000–3
75.1906 (k) and (l)	New
75.1907	New
75.1908	New
75.1909 (a)(1) through (a)(3)(i).	New
75.1909 (a)(3)(ii)	New, 36.27(a)(1)
75.1909 (a)(3)(iii) through (a)(3)(ix).	New
75.1909 (a)(3)(x)	New, 36.27(c)
75.1909 (a)(3)(xi) through (b)(3).	New
75.1909(b)(4)	New, 36.28
75.1909(b)(5)	New, 36.33(b)
75.1909 (b)(6) through (b)(8).	New, 36.29
75.1909(c)	New, 75.523–3, 75.1404, 75.1404–1
75.1909(c)(1)	New, 75.523–3(b)(2)
75.1909(c)(2)	New, 75.523–3(b)(3)
75.1909(c)(3)	New, 75.523–3(b)(4)
75.1909(c)(4)	New, 75.523–3(b)(5)
75.1909(c)(5)	New, 75.523–3(c)
75.1909(c)(6)	New
75.1909(d)	New, 75.523–3(d)
75.1909(e)	New, 75.523–3(e)
75.1909(f)	New, 36.29
75.1909 (g) through (j).	New
75.1910(a)	New, 75.518, 75.518–1
75.1910 (b) through (e).	New
75.1910(f)	New, 75.513, 75.513–1
75.1910 (g) and (h)	New, 75.515
75.1910(i)	New, 75.514
75.1910(j)	New
75.1910(k)	New, 7.44(a)(1)
75.1910(l)	New, 7.44 (d), (e), and (m)
75.1910(m)	New, 7.44(f)
75.1910(n)	New, 7.44(h)
75.1910(o)	New, 7.44(g)
75.1911 (a) through (k).	New
75.1911(l)	New, 75.380(f), 75.1107–3 through 75.1107–16
75.1912(a)(1)	New, 75.1107–13
75.1912 (a)(2) through (b).	New
75.1912(c)	New, 75.1101–23
75.1912(d)	New, 75.1107–4
75.1912 (e) through (g).	New
75.1912(h)	New, 75.1107–16
75.1912(i)	New
75.1912(j)	New, 75.1101–23
75.1913	New
75.1914	New
75.1915	New
75.1916(a)	New, 75.380(d), 75.1403
75.1916 (b) through (e).	New

Distribution Table

The following table lists section numbers of existing standards which contain provisions that were used in the development of the listed final standards.

Existing sections	New sections
7.2	7.82, 7.96
7.3	7.83, 7.97
7.6	7.105
7.8(b)	7.106
7.44(a)(1)	75.1910(k)
7.44 (d) and (e)	75.1910(l)
7.44(f)	75.1910(m)
7.44(g)	75.1910(o)
7.44(h)	75.1910(n)
7.44(m)	75.1910(l)
7.44(a)(1)	75.1910(k)
7.52	7.107
Part 31	Part 36
Part 32	Part 7—Subpart E, 75.325 (f) through (k), and Part 75—Subpart T
32.4(f)	7.84
Part 36—Subpart B	7.98
36.2	7.82, 7.96
36.2(h)	36.2(f)
36.2(i)	75.1901(a)
36.6	7.83, 7.97
36.11	7.90, 7.105
36.26(b)	7.84
36.27(a)(1)	75.1909(a)(3)(ii)
36.27(c)	75.1909(a)(3)(x)
36.28	75.1909(b)(4)
36.29	75.1909 (b)(6) through (b)(8) and (f)
36.33(b)	75.1909(b)(5)
36.44	7.84
36.46	7.100, 7.101, 7.104
36.47	7.102, 7.103
75.100	70.1900(a)
75.301	75.1900, 75.1903(a)(1)
75.322	7.84, 7.88, 70.1900(c), 75.325 (i) and (j), 75.371(pp)
75.325 (g) and (i)	75.371(r)
75.325(j)	70.1900(c)
75.333(e)	75.1903(a)(4)
75.340	75.1903 (a)(1) and (a)(4)
75.362	70.1900(a)
75.363	70.1900(d)
75.371	75.325(k)
75.380(d)	75.1916(a)
75.380(f)	75.1911(l)
75.513 and 75.513–1	75.1910(f)
75.514	75.1910(i)
75.515	75.1910 (g) and (h)
75.518 and 75.518–1	75.1910(a)
75.523–3	75.1909(c)
75.523–3(b)(2)	75.1909(c)(1)
75.523–3(b)(3)	75.1909(c)(2)
75.523–3(b)(4)	75.1909(c)(3)
75.523–3(b)(5)	75.1909(c)(4)
75.523–3(c)	75.1909(c)(5)
75.523–3(d)	75.1909(d)
75.523–3(e)	75.1909(e)
75.1000–3	75.1906(j)
75.1100–2(f)	75.1903(b)(1)
75.1101–23	75.1912 (c) and (j)
75.1107–3 through 75.1107–16.	75.1911(l)
75.1107–3 through 75.1107–6 and 75.1107–8 through 75.1107–16.	75.1906(g)
75.1107–4	75.1912(d)
75.1107–13	75.1912(a)(1)
75.1107–16	75.1912(h)
75.1403	75.1916(a)
75.1404 and 75.1404–1.	75.1909(c)
40 CFR 79	75.1901(c)

III. Paperwork Reduction Act

The information collection requirements contained in this rule have been submitted to the Office of Management and Budget (OMB) for review under the Paperwork Reduction Act of 1995 (44 U.S.C. 3501–3520), as implemented by OMB in regulations at 5 CFR 1320. No person may be required to respond to, or may be subjected to a penalty for failure to comply with, these information collection requirements until they have been approved by OMB and MSHA has displayed the assigned OMB control number. The OMB control number, when assigned, will be announced by separate notice in the Federal Register.

The final rule addresses comments submitted to OMB and MSHA on the collection of information requirements in the proposed rule in the section-by-section discussions. In revising the requirements from those that appeared in the proposed rule, MSHA has evaluated the necessity and usefulness of the collection of information; reevaluated MSHA's estimate of the information collection burden, including the validity of the underlying methodology and assumptions; and minimized the information collection burden on respondents to the extent possible. This final rule also provides for the use of electronic storage and maintenance of records.

Tables 1 through 4 show the distribution of information collection burden hours imposed by the requirements of the final rule. Tables 1 and 2 pertain to manufacturers, Table 3 pertains to small mine operators, and Table 4 pertains to large mine operators.

TABLE 1.—ESTIMATED ANNUAL NEW BURDEN RELATED TO MANUFACTURERS

Detail	Number of respondents	Hours per response	Number of responses	Number of responses per respondent	Capital costs annualized (rounded)	Operating and maintenance costs (rounded)	Total hours
Part 7—Subpart E							
New Eng. (Perm.) [1]	1.5	43	1.5	1	$0	$0	65
New Eng. (Perm.) [2]	1.5	0.5	1.5	1	0	75	1
New Eng. (Nonperm.) [3]	2.5	34	2.5	1	0	0	85
New Eng. (Nonperm.) [4]	2.5	0.5	2.5	1	0	100	1
Existing Eng. (Nonperm.) [5]	16	5	16	1	425	0	80
New Eng. (Nonperm.) [6]	1	34.5	1	1	0	2,600	35
Existing Eng. (Nonperm.) [7]	1	34.5	1	1	200	0	35
7.90	148	0.1667	148	1	0	450	24
Part 7—Subpart F							
New Pow. Pack. (Perm.) [8]	1.5	43	1.5	1	0	0	65
Existing Pow. Pack. (Perm.) [9]	33	12	33	1	2,100	0	396
7.105	20	0.1667	20	1	0	75	3
Total Increases					2,725	3,300	790

[1] New diesel-powered engine models used in permissible equipment will require a maximum fuel:air ratio test and a gaseous ventilation rate test under part 7, subpart E, instead of under existing part 36. Burden hours are shifted from existing part 36 to part 7, subpart E. The annual estimated application costs of $4,850 are currently being incurred by manufacturers under part 36. Under the final rule, such costs will continue to be incurred under part 7, subpart E, instead of under part 36. There are no new compliance costs.

[2] New diesel-powered engine models used in permissible equipment that would have received part 36 approval will require a particulate index test.

[3] New diesel-powered engine models used in nonpermissible equipment that would have received part 32 approval will require a maximum fuel air ratio test and a gaseous ventilation rate test under part 7, subpart E, instead of under part 32. As a result of this rule, part 32 is deleted and burden hours related to the tests on such engine models are shifted from deleted part 32 to part 7, subpart E. The annual estimated application costs of $6,375 are currently being incurred by manufacturers under part 32. Under the final rule, such costs will continue to be incurred under part 7, subpart E, instead of under part 32. There are no new compliance costs.

[4] New diesel-powered engine models used in nonpermissible equipment that would have received part 32 approval will require a particulate index test.

[5] Existing diesel-powered engine models used in nonpermissible equipment that have part 32 approval will require a one time particulate index test.

[6] New diesel-powered engine models used in nonpermissible equipment that would not have received part 32 approval will require a maximum fuel air ratio test, a gaseous ventilation rate test, and a particulate index test.

[7] Existing diesel-powered engine models used in nonpermissible equipment that do not have part 32 approval will require a one time maximum fuel air ratio test, a gaseous ventilation rate test, and a particulate index test.

[8] New diesel-power package models used in permissible equipment will require approval under part 7, subpart F, instead of under part 36. Burden hours related to such approvals are shifted from part 36 to part 7, subpart F. The annual estimated application costs of $4,850 are currently being incurred by manufacturers under part 36. Under the final rule, such costs will continue to be incurred under part 7, subpart F, instead of under part 36. There are no new compliance costs.

[9] Diesel-power package models used in permissible equipment and previously approved under part 36 could be reapproved and used to comply with the requirement for a diesel power package pursuant to part 7, subpart F.

TABLE 2.—ESTIMATED ANNUAL DECREASE IN BURDEN RELATED TO MANUFACTURERS [1]

Detail	Number of respondents	Hours per response	Number of responses	Number of responses per respondent	Capital costs annualized	Operation and maintenance costs	Total hours
Part 36							
New Eng. (Perm.) [2]	1.5	43	1.5	1	$0	$0	65
New Pow. Pack. (Perm.) [3]	1.5	43	1.5	1	0	0	65
Part 32							
New Eng. (Nonperm.) [4]	2.95	34.5	2.95	1	0	0	102
Total Decreases							232

[1] Burden hours in this chart were developed and approved under the Paperwork Reduction Act of 1980 (PRA 80). PRA 80 did not require costs to be reported with burden hours. Thus no compliance costs are noted in this table.

[2] New diesel-powered engine models used in permissible equipment will be approved under part 7, subpart E, instead of part 36.

[3] Diesel-power package models used in permissible equipment will be approved under part 7, subpart F, instead of part 36.

[4] New diesel-powered engine models used in nonpermissible equipment will be approved under part 7, subpart E, instead of part 32.

TABLE 3.— ESTIMATED ANNUAL NEW BURDEN FOR SMALL UNDERGROUND COAL OPERATORS THAT USE DIESEL-POWERED EQUIPMENT [1]

Detail	Number of respondents [2]	Hours per response	Number of responses	Number of responses per respondent	Capital costs annualized (rounded)	Operation and maintenance costs (rounded)	Total hours
§ 75.363	10	0.10	100	10	$2,100	$3,800	10
§ 75.370	15	0.1667	15	1	0	100	3
§ 75.1901(a)	8	0.05	160	20	0	100	8
§ 75.1904(b)(4)(i)	15	0.0333	20	1	<25	0	1
§ 75.1911 (i)&(j) [3]	15	0.3333	212	14	0	1,835	71
§ 75.1911 (i)&(j) [4]	15	1.0833	11	<1	0	915	12
§ 75.1912 (h)&(i) [5]	15	0.5833	20	1	0	300	12
§ 75.1912 (h)&(i) [6]	15	1.0833	2	<1	0	100	2
§ 75.1914 (f)(1)&(h)	15	[7] 1.1857	500	33	0	15,400	593
§ 75.1914 (f)(2)&(h)	15	0.0833	500	33	0	1,100	42
§ 75.1914(g)&(h) [8]	15	2	30	2	150	0	60
§ 75.1914 (g)&(h) [9]	1	2	1	1	0	50	2
§ 75.1914 (g)(5)&(h)	15	0.25	1,480	98	3,150	16,650	370
§ 75.1915(a)	15	5	30	2	400	0	150
§ 75.1915 (b)(5)&(c) [8]	15	10	15	1	400	0	150
§ 75.1915 (b)(5)&(c) [9]	1	3	1	1	0	125	3
Total					6,225	40,475	1,489

[1] Small mines are those that employ 19 or fewer people.
[2] Respondents are the number of small mines.
[3] Section 75.1911(j) requires a record of § 75.1911(i) weekly exams which find defects.
[4] Section 75.1911(j) requires a record of § 75.1911(i) manufacturer recommended exams which find defects.
[5] Section 75.1912(i) requires a record of § 75.1912(h) weekly exams which find defects.
[6] Section 75.1912(i) requires a record of § 75.1912(h) manufacturer recommended exams which find defects.
[7] Represents a weighted average of hours based upon different exam hours for different types of equipment.
[8] Reflects burden hours that will occur in the first year of implementation of the provision.
[9] Reflects burden hours that will occur annually, after the first year of implementation of the provision.

TABLE 4.—ESTIMATED ANNUAL NEW BURDEN FOR LARGE UNDERGROUND COAL OPERATORS THAT USE DIESEL-POWERED EQUIPMENT [1]

Detail	Number of respondent [2]	Hours per responses	Number of responses	Number of responses per respondent	Capital costs annualized (rounded)	Operating and maintenance costs (rounded)	Total hours
§ 75.363	100	0.1834	1,000	10	$20,950	$40,825	184
§ 75.370	158	0.3333	158	1	0	1,975	52
§ 75.1901(a)	79	0.05	1,975	25	0	1,000	99
§ 75.1904(b)(4)(i)	158	0.0333	494	3	250	0	16
§ 75.1911 (i) & (j) [3]	158	0.3333	14,810	94	0	128,340	4,936
§ 75.1911 (i) & (j) [4]	158	1.0833	592	4	0	51,335	641
§ 75.1912 (h) & (i) [5]	158	0.5833	100	<1	0	1,525	58
§ 75.1912 (h) & (i) [6]	158	1.0833	4	<1	0	350	5
§ 75.1914 (f)(1) & (h)	158	[7] 0.6234	35,975	227	0	583,150	22,428
§ 75.1914 (f)(2) & (h)	158	0.0833	35,975	227	0	77,925	2,997
§ 75.1914 (g) & (h) [8]	158	2	711	4	3,725	0	1,422
§ 75.1914 (g) & (h) [9]	5	2	22.5	4	0	1,700	45
§ 75.1914 (g)(5) & (h)	158	0.25	52,350	331	33,100	460,225	13,088
§ 75.1915(a)	158	5	1,264	8	0	236,000	6,320
§ 75.1915 (b)(5) & (c) [8]	158	16	158	1	6,600	0	2,528
§ 75.1915 (b)(5) & (c) [9]	5	16	5	1	0	3,000	80
Total					64,625	1,587,350	54,899

[1] Large mines are those that employ 20 or more people.
[2] Respondents are the number of large mines.
[3] Section 75.1911(j) requires a record of § 75.1911(i) weekly exams which find defects.
[4] Section 75.1911(j) requires a record of § 75.1911(i) manufacturer recommended exams which find defects.
[5] Section 75.1912(i) requires a record of § 75. 1912(h) weekly exams which find defects.
[6] Section 75.1912(i) requires a record of § 75. 1912(h) manufacturer recommended exams which find defects.
[7] Represents a weighted average of hours based upon different exam hours for different types of equipment.
[8] Reflects burden hours that will occur in the first year of implementation of the provision.
[9] Reflects burden hours that will occur annually, after the first year of implementation of the provision.

IV. Executive Order 12866 and Regulatory Flexibility Analysis

Under E.O. 12866 [58 FR 51735, October 4, 1993] the Agency must determine whether the regulatory action is ''significant'' and subject to OMB review.

E.O. 12866 defines ''significant regulatory action'' as one that is likely to result in a rule that may: (1) Have an annual effect on the economy of $100 million or more or adversely affect in a material way the economy, a sector of the economy, productivity, competition, jobs, the environment, public health or safety, or state, local, or tribal governments or communities; (2) create a serious inconsistency or otherwise interfere with an action taken or planned by another agency; (3) materially alter the budgetary impact of entitlements, grants, user fees, or loan programs or the right and obligations of recipients thereof; or (4) raise novel legal or policy issues arising out of legal mandates, the President's priorities, or the principles set forth in the Executive Order.

OMB determined that this rule for diesel-powered equipment in underground coal mines is a ''significant regulatory action'' because MSHA's diesel particulate rulemaking for all mines has been designated ''significant'' by the Agency. Although the diesel particulate rulemaking is separate and distinct from this final rule, OMB concluded that there is a sufficient enough relationship with this final rule to warrant its designation as significant. As such, MSHA has submitted this final rule to OMB for review.

As required by E.O. 12866, the Agency determined costs and benefits associated with this final rule and has prepared a Final Regulatory Impact Analysis (RIA) and a Final Regulatory Flexibility Analysis (RFA). The RFA assesses benefits and costs of, and potentially effective and reasonably feasible alternatives to, the planned regulatory action. The RIA and RFA are available electronically and on request from MSHA through the address listed in the contact section at the beginning of this document. It is summarized below.

Benefits

The final rule establishes comprehensive and integrated requirements governing diesel-powered equipment used in underground coal mines. Compliance with the rule will minimize fire, explosion, fuel handling, and fuel storage hazards. The health hazards of diesel engine exhaust are addressed by design, performance, and maintenance standards for diesel engines. Other safety hazards associated with the use of diesel-powered equipment in underground coal mines are also addressed.

The final rule includes tests and specifications for MSHA approval of diesel engines. Clean operating engines will reduce miners' exposure to harmful emissions in the confined underground mine environment. The final rule sets test procedures and limits on the concentrations of carbon monoxide and oxides of nitrogen, and establishes the quantity of ventilating air necessary to dilute these exhaust contaminants to safe levels. The rule also contains tests and specifications for approval of diesel engine components, to ensure that diesel engines are fire and explosion-proof.

The final rule also requires diesel-powered equipment to be equipped with certain safety features. These safety features will result in reduced fire hazards and lower the risk of accidents involving diesel-powered equipment. For example, the final rule requires diesel-powered equipment to have basic safety features, such as brakes and lights; fire protection features, including fuel, hydraulic, and electrical system protections; and properly designed, installed, and maintained fire suppression systems. In addition, the rule extends to diesel-powered equipment safety measures that already apply to electric-powered equipment that are proven to protect miners from cave-ins, such as cabs and canopies, and from explosions, such as methane monitors.

The final rule provides for a systematic approach to the clean and safe operation of diesel-powered equipment. To accomplish this, the final rule sets standards for ventilation of diesel-powered equipment, and for routine sampling of toxic exhaust gases in the workplace, and requires the use of low sulfur diesel fuel to minimize emissions. It also requires that maintenance be performed by trained personnel to keep diesel equipment in proper operating condition.

To ensure that the hazards associated with diesel fuel usage in the underground mine environment are properly controlled, the final rule includes requirements for the underground storage, transportation, and dispensing of diesel fuel. Design, tank capacity, and dispensing requirements are set for diesel fuel storage, as well as safety precautions and construction requirements for underground storage facilities and areas, including automatic fire suppression systems. These provisions will reduce the risk of fires involving diesel fuel.

The final rule also extends several longstanding safety requirements for electric equipment to diesel-powered equipment. The final rule requires certain diesel equipment to be installed with methane monitors, providing miners with critical protection against methane explosions. The final rule also requires cabs and canopies to be installed on certain diesel-powered equipment, protecting miners from the dangers of roof and rib falls in the underground mine environment.

Cost of Compliance

The compliance costs associated with the standards directly impact two industry groups: manufacturers of diesel-powered mining equipment and operators of underground coal mines. Part 7, subparts E and F relate to manufacturer costs and parts 70 and 75 relate to operator costs. The total compliance costs of the rule are estimated to be about $10.35 million per year, of which mine operators will incur about $10.3 million per year and manufacturers will incur about $50,000 per year.

The per-year cost of $10.3 million for mine operators consists of $4.9 million of annualized cost plus $5.4 million of annual costs. Of the $10.3 million, large mine operators will incur about $10.1 million, which consists of $4.8 million of annualized costs and $5.3 million of annual costs. Of the $10.3 million, small mine operators will incur about $210,800, which consists of $92,300 of annualized costs and $118,500 of annual costs. The per-year compliance costs for large and small mine operators is shown by section in Table 5.

Manufacturers will incur costs of approximately $50,450 per year. The $50,450 consists of $15,900 of annualized costs and $34,550 of annual costs. The per-year compliance costs for manufacturers is shown by section in Table 6.

TABLE 5.—UNDERGROUND COAL MINE COMPLIANCE COSTS FOR DIESEL EQUIPMENT

[Dollars × 1,000]

Standard	Large and small mines			Large mines			Small mines		
	(A) total [col. B+C]	(B) annualized	(C) annual	(D) total [col. E+F]	(E) annualized	(F) annual	(G) total [Col. H+I]	(H) annualized	(I) annual
70.1900	($59.7)	$80.9	($140.6)	($77.7)	$75.8	($153.5)	$18.0	$5.1	$12.9
75.325	589.0	0	589.0	589.0	0	589.0	0	0	0
75.1902	39.7	39.7	0	37.6	37.6	0	2.1	2.1	0
75.1903	68.5	51.5	17.0	58.2	44.7	13.5	10.3	6.8	3.5
75.1904	32.7	32.7	0	31.2	31.2	0	1.5	1.5	0
75.1905	2.4	2.4	0	2.3	2.3	0	0.1	0.1	0
75.1906	251.8	173.5	78.3	244.7	168.8	75.9	7.1	4.7	2.4
75.1907	1,610.3	1,596.6	13.7	1,589.6	1,576.4	13.2	20.7	20.2	0.5
75.1909	3,028.0	2,532.9	495.1	2,971.2	2,487.6	483.6	56.8	45.3	11.5
75.1910	117.4	117.4	0	116.1	116.1	0	1.3	1.3	0
75.1911	1,221.3	0	1,221.3	1,203.2	0	1,203.2	18.1	0	18.1
75.1912	20.0	0	20.0	16.5	0	16.5	3.5	0	3.5
75.1913	9.5	9.5	0	9.4	9.4	0	0.1	0.1	0
75.1914	2,769.3	40.1	2,729.2	2,700.0	36.8	2,663.2	69.3	3.3	66.0
75.1915	573.9	155.4	418.5	572.3	153.9	418.4	1.6	1.5	0.1
75.1916	8.7	8.7	0	8.4	8.4	0	0.3	0.3	0
Total	10,282.8	4,841.3	5,441.5	10,072.0	4,749.0	5,323.0	210.8	92.3	118.5

TABLE 6.—ESTIMATED MANUFACTURERS COMPLIANCE COSTS ASSOCIATED WITH THE REGULATIONS FOR DIESEL-POWERED EQUIPMENT IN UNDERGROUND COAL MINES

Standard	Manufacturers costs		
	(A) total [col. B+C]	(B) annualized	(c) annual
Part 7—Subpart E	$42,650	$12,200	$30,450
Part 7—Subpart F	7,800	3,700	4,100
Total Part 7	50,450	15,900	34,550

Regulatory Flexibility Certification

The Regulatory Flexibility Act requires that agencies developing regulatory standards evaluate and, where possible, include compliance alternatives that minimize any impact that would adversely affect small businesses. The use of diesel-powered equipment presents similar health and safety hazards in both large and small mining operations, and small mines will benefit from the requirements in the final rule. MSHA, therefore, has not exempted small mines from any provision of the final rule.

Regulatory relief is not warranted because the final rule will not impose a substantial cost increase for small mines. MSHA has determined that these provisions will not have a significantly adverse impact upon a substantial number of small entities.

Small Business Regulatory Enforcement Fairness Act

MSHA has determined that this final rule is not a ''major rule'' requiring prior approval by the Congress and the President under the Small Business Regulatory Enforcement Act of 1996 (5 U.S.C. § 801 *et seq.*) (SBREFA), because it is not likely to result in: (1) an annual effect on the economy of $100 million or more; (2) a major increase in costs or prices for consumers, individual industries, federal, state, or local government agencies, or geographic regions; or (3) significant adverse effects on competition, employment, investment, productivity, innovation, or on the ability of United States-based enterprises to compete with foreign enterprises in domestic and export markets.

The Agency will send copies of the final rule, preamble, and regulatory flexibility analysis to the President of the Senate, the Speaker of the House, and the General Counsel of the General Accounting Office.

V. Unfunded Mandates Reform Act of 1995

Title II of the Unfunded Mandates Reform Act of 1995, Pub.L. 104–4, requires each federal agency to assess the effects of federal regulatory actions on state, local, and tribal governments and the private sector, other than to the extent such actions merely incorporate requirements specifically set forth in a statute. For purposes of the Unfunded Mandates Reform Act of 1995, as well as E.O. 12875, this rule does not include any federal mandate that may result in increased expenditures by either State, local, and tribal governments, or increased expenditures by the private sector of more than $100 million on the private sector.

VI. Electronic Availability of Rulemaking Documents

Electronic copies of the preamble and final rule, and the Regulatory Impact Analysis and Regulatory Flexibility Analysis are available on the Internet at the U.S. Department of Labor, Mine Safety and Health Administration's World Wide Web home page at http://www.msha.gov. Instructions for accessing regulatory documents and information are as follows:

From MSHA's home page select the menu item entitled ''Statutory and Regulatory Information.'' This will direct the search to the Statutory and Regulatory menu page. Then select the menu item entitled ''Federal Register Documents.'' This will direct the search

to the menu page for Federal Register Documents. The type of documents listed are proposed rules, final rules, meetings (Advisory Committees), Information Collection Requests, petitions for modifications, proposed policies, and miscellaneous notices. Select the menu item desired. To return to MSHA's home page, use the icon at the bottom of the page or the ''Back Button'' provided by your browser.

List of Subjects

30 CFR Part 7

Diesel-powered equipment, Mine safety and health, Reporting and recordkeeping requirements.

30 CFR Parts 31 and 32

Reporting and recordkeeping requirements, Research, Underground coal mines.

30 CFR Part 36

Mine safety and health.

30 CFR Parts 70 and 75

Diesel-powered equipment, Incorporations by reference, Mine safety and health, Underground coal mines, Reporting and recordkeeping requirements.

Dated: October 15, 1996.

J. Davitt McAteer,

Assistant Secretary for Mine Safety and Health.

Accordingly, chapter I of title 30, Code of Federal Regulations is amended as follows:

PART 7—TESTING BY APPLICANT OR THIRD PARTY

1. The authority citation for part 7 continues to read as follows:

Authority: 30 U.S.C. 957.

2. New subparts E and F are added to part 7 to read as follows:

Subpart E—Diesel Engines Intended for Use in Underground Coal Mines

Sec.
7.81 Purpose and effective date.
7.82 Definitions.
7.83 Application requirements.
7.84 Technical requirements.
7.85 Critical characteristics.
7.86 Test equipment and specifications.
7.87 Test to determine the maximum fuel-air ratio.
7.88 Test to determine the gaseous ventilation rate.
7.89 Test to determine the particulate index.
7.90 Approval marking.
7.91 Post-approval product audit.
7.92 New technology.

Subpart E—Diesel Engines Intended for Use in Underground Coal Mines

§ 7.81 Purpose and effective date.

Subpart A general provisions of this part apply to this subpart E. Subpart E establishes the specific engine performance and exhaust emission requirements for MSHA approval of diesel engines for use in areas of underground coal mines where permissible electric equipment is required and areas where non-permissible electric equipment is allowed. It is effective November 25, 1996.

§ 7.82 Definitions.

In addition to subpart A definitions of this part, the following definitions apply in this subpart.

Brake Power. The observed power measured at the crankshaft or its equivalent when the engine is equipped only with standard auxiliaries necessary for its operation on the test bed.

Category A engines. Diesel engines intended for use in areas of underground coal mines where permissible electric equipment is required.

Category B engines. Diesel engines intended for use in areas of underground coal mines where nonpermissible electric equipment is allowed.

Corrosion-resistant material. Material that has at least the corrosion-resistant properties of type 304 stainless steel.

Diesel engine. Any compression ignition internal combustion engine using the basic diesel cycle where combustion results from the spraying of fuel into air heated by compression.

Exhaust emission. Any substance emitted to the atmosphere from the exhaust port of the combustion chamber of a diesel engine.

Intermediate speed. Maximum torque speed if it occurs between 60 percent and 75 percent of rated speed. If the maximum torque speed is less than 60 percent of rated speed, then the intermediate speed shall be 60 percent of the rated speed. If the maximum torque speed is greater than 75 percent of the rated speed, then the intermediate speed shall be 75 percent of rated speed.

Low idle speed. The minimum no load speed as specified by the engine manufacturer.

Maximum torque speed. The speed at which an engine develops maximum torque.

Operational range. All speed and load (including percent loads) combinations from the rated speed to the minimum permitted engine speed at full load as specified by the engine manufacturer.

Particulates. Any material collected on a specified filter medium after diluting exhaust gases with clean, filtered air at a temperature of less than or equal to 125° F (52° C), as measured at a point immediately upstream of the primary filter. This is primarily carbon, condensed hydrocarbons, sulfates, and associated water.

Percent load. The fraction of the maximum available torque at an engine speed.

Rated horsepower. The nominal brake power output of a diesel engine as specified by the engine manufacturer with a specified production tolerance. For laboratory test purposes, the fuel pump calibration for the rated horsepower must be set between the nominal and the maximum fuel tolerance specification.

Rated speed. Speed at which the rated power is delivered, as specified by the engine manufacturer.

Steady-state condition. Diesel engine operating condition which is at a constant speed and load and at stabilized temperatures and pressures.

Total oxides of nitrogen. The sum total of the measured parts per millions (ppm) of nitric oxide (NO) plus the measured ppm of nitrogen dioxide (NO_2).

§ 7.83 Application requirements.

(a) An application for approval of a diesel engine shall contain sufficient information to document compliance with the technical requirements of this subpart and specify whether the application is for a category A engine or category B engine.

(b) The application shall include the following engine specifications—

(1) Model number;

(2) Number of cylinders, cylinder bore diameter, piston stroke, engine displacement;

(3) Maximum recommended air inlet restriction and exhaust backpressure;

(4) Rated speed(s), rated horsepower(s) at rated speed(s), maximum torque speed, maximum rated torque, high idle, minimum permitted engine speed at full load, low idle;

(5) Fuel consumption at rated horsepower(s) and at the maximum rated torque;

(6) Fuel injection timing; and

(7) Performance specifications of turbocharger, if applicable.

(c) The application shall include dimensional drawings (including tolerances) of the following components specifying all details affecting the technical requirements of this subpart. Composite drawings specifying the required construction details may be submitted instead of individual drawings of the following components—

(1) Cylinder head;
(2) Piston;
(3) Inlet valve;
(4) Exhaust valve;
(5) Cam shaft—profile;
(6) Fuel cam shaft, if applicable;
(7) Injector body;
(8) Injector nozzle;
(9) Injection fuel pump;
(10) Governor;
(11) Turbocharger, if applicable;
(12) Aftercooler, if applicable;
(13) Valve guide;
(14) Cylinder head gasket; and
(15) Precombustion chamber, if applicable.

(d) The application shall include a drawing showing the general arrangement of the engine.

(e) All drawings shall be titled, dated, numbered, and include the latest revision number.

(f) When all necessary testing has been completed, the following information shall be submitted:

(1) The gaseous ventilation rate for the rated speed and horsepower.

(2) The particulate index for the rated speed and horsepower.

(3) A fuel deration chart for altitudes for each rated speed and horsepower.

§ 7.84 Technical requirements.

(a) *Fuel injection adjustment.* The fuel injection system of the engine shall be constructed so that the quantity of fuel injected can be controlled at a desired maximum value. This adjustment shall be changeable only after breaking a seal or by altering the design.

(b) *Maximum fuel-air ratio.* At the maximum fuel-air ratio determined by § 7.87 of this part, the concentrations (by volume, dry basis) of carbon monoxide (CO) and oxides of nitrogen (NO_X) in the undiluted exhaust gas shall not exceed the following:

(1) There shall be no more than 0.30 percent CO and no more than 0.20 percent NO_X for category A engines.

(2) There shall be no more than 0.25 percent CO and no more than 0.20 percent NO_X for category B engines.

(c) Gaseous emissions ventilation rate. Ventilation rates necessary to dilute gaseous exhaust emissions to the following values shall be determined under § 7.88 of this part:

Carbon dioxide	−5000 ppm
Carbon monoxide	−50 ppm
Nitric oxide	−25 ppm
Nitrogen dioxide	−5 ppm

A gaseous ventilation rate shall be determined for each requested speed and horsepower rating as described in § 7.88(b) of this part.

(d) *Fuel deration.* The fuel rates specified in the fuel deration chart shall be based on the tests conducted under paragraphs (b) and (c) of this section and shall ensure that the maximum fuel:air (f/a) ratio determined under paragraph (b) of this section is not exceeded at the altitudes specified in the fuel deration chart.

(e) *Particulate index.* For each rated speed and horsepower requested, the particulate index necessary to dilute the exhaust particulate emissions to 1 mg/m^3 shall be determined under § 7.89 of this part.

§ 7.85 Critical characteristics.

The following critical characteristics shall be inspected or tested on each diesel engine to which an approval marking is affixed—

(a) Fuel rate is set properly; and

(b) Fuel injection pump adjustment is sealed, if applicable.

§ 7.86 Test equipment and specifications.

(a) Dynamometer test cell shall be used in determining the maximum f/a ratio, gaseous ventilation rates, and the particulate index.

(1) The following testing devices shall be provided:

(i) An apparatus for measuring torque that provides an accuracy of ±2.0 percent based on the engine's maximum value;

(ii) An apparatus for measuring revolutions per minute (rpm) that provides an accuracy of ±2.0 percent based on the engine's maximum value;

(iii) An apparatus for measuring temperature that provides an accuracy of ±4° F (2° C) of the absolute value except for the exhaust gas temperature device that provides an accuracy of ±27° F (15° C);

(iv) An apparatus for measuring intake and exhaust restriction pressures that provides an accuracy of ±5 percent of maximum;

(v) An apparatus for measuring atmospheric pressure that provides an accuracy of ±0.5 percent of reading;

(vi) An apparatus for measuring fuel flow that provides an accuracy of ±2 percent based on the engine's maximum value;

(vii) An apparatus for measuring the inlet air flow rate of the diesel engine that provides an accuracy of ±2 percent based on the engine's maximum value; and

(viii) For testing category A engines, an apparatus for metering in 1.0 ±0.1 percent, by volume, of methane (CH_4) into the intake air system shall be provided.

(2) The test fuel specified in Table E–1 shall be a low volatile hydrocarbon fuel commercially designated as ''Type 2–D'' grade diesel fuel. The fuel may contain nonmetallic additives as follows: Cetane improver, metal deactivator, antioxidant, dehazer, antirust, pour depressant, dye, dispersant, and biocide.

TABLE E–1.—DIESEL TEST FUEL SPECIFICATIONS

Item	ASTM	Type 2–D
Cetane number	D613	40–48.
Cetane index	D976	40–48.
Distillation range:		
IBP °F	D86	340–400.
(°C)		(171.1–204.4).
10 pct. point, °F	D86	400–460.
(°C)		(204.4–237.8).
50 pct. point, °F	D86	470.540.
(°C)		(243.3–282.2).
90 pct. point, °F	D86	560–630.
(°C)		(293.3–332.2).
EP, °F	D86	610–690.
(°C)		(321.1–365.6).
Gravity, °API	D287	32–37.
Total sulfur, pct.	D2622	0.03–0.05.
Hydrocarbon composition:		
Aromatics, pct.	D1319	27 minimum.
Paraffins, naphthenes, olefins	D1319	Remainder.

TABLE E–1.—DIESEL TEST FUEL SPECIFICATIONS—Continued

Item	ASTM	Type 2–D
Flashpoint, minimum, °F	93	130.
(°C)		(54.4).
Viscosity, centistokes	445	2.0–3.2.

(3) The test fuel temperature at the inlet to the diesel engine's fuel injection pump shall be controlled to the engine manufacturer's specification.

(4) The engine coolant temperature (if applicable) shall be maintained at normal operating temperatures as specified by the engine manufacturer.

(5) The charge air temperature and cooler pressure drop (if applicable) shall be set to within ±7° F(4° C) and ±0.59 inches Hg (2kPa) respectively, of the manufacturer's specification.

(b) Gaseous emission sampling system shall be used in determining the gaseous ventilation rates.

(1) The schematic of the gaseous sampling system shown in Figure E–1 shall be used for testing category A engines. Various configurations of Figure E–1 may produce equivalent results. The components in Figure E–1 are designated as follows—

(i) Filters—F1, F2, F3, and F4;

(ii) Flowmeters—FL1, FL2, FL3, FL4, FL5, FL6, and FL7;

(iii) Upstream Gauges—G1, G2, and G5;

(iv) Downstream Gauges—G3, G4, and G6;

(v) Pressure Gauges—P1, P2, P3, P4, P5, and P6;

(vi) Regulators—R1, R2, R3, R4, R5, R6, and R7;

(vii) Selector Valves—V1, V2, V3, V4, V6, V7, V8, V15, and V19;

(viii) Heated Selector Valves—V5, V13, V16, and V17;

(ix) Flow Control Valves—V9, V10, V11 and V12;

(x) Heated Flow Control Valves—V14 and V18;

(xi) Pump—Sample Transfer Pump;

(xii) Temperature Sensor—(T1);

(xiii) Dryer—D1 and D2; and

(xiv) Water traps—WT1 and WT2.

(A) Water removal from the sample shall be done by condensation.

(B) The sample gas temperature or dew point shall be monitored either within the water trap or downstream of the water trap and shall not exceed 45° F (7° C).

(C) Chemical dryers are not permitted.

BILLING CODE 4510–43–P

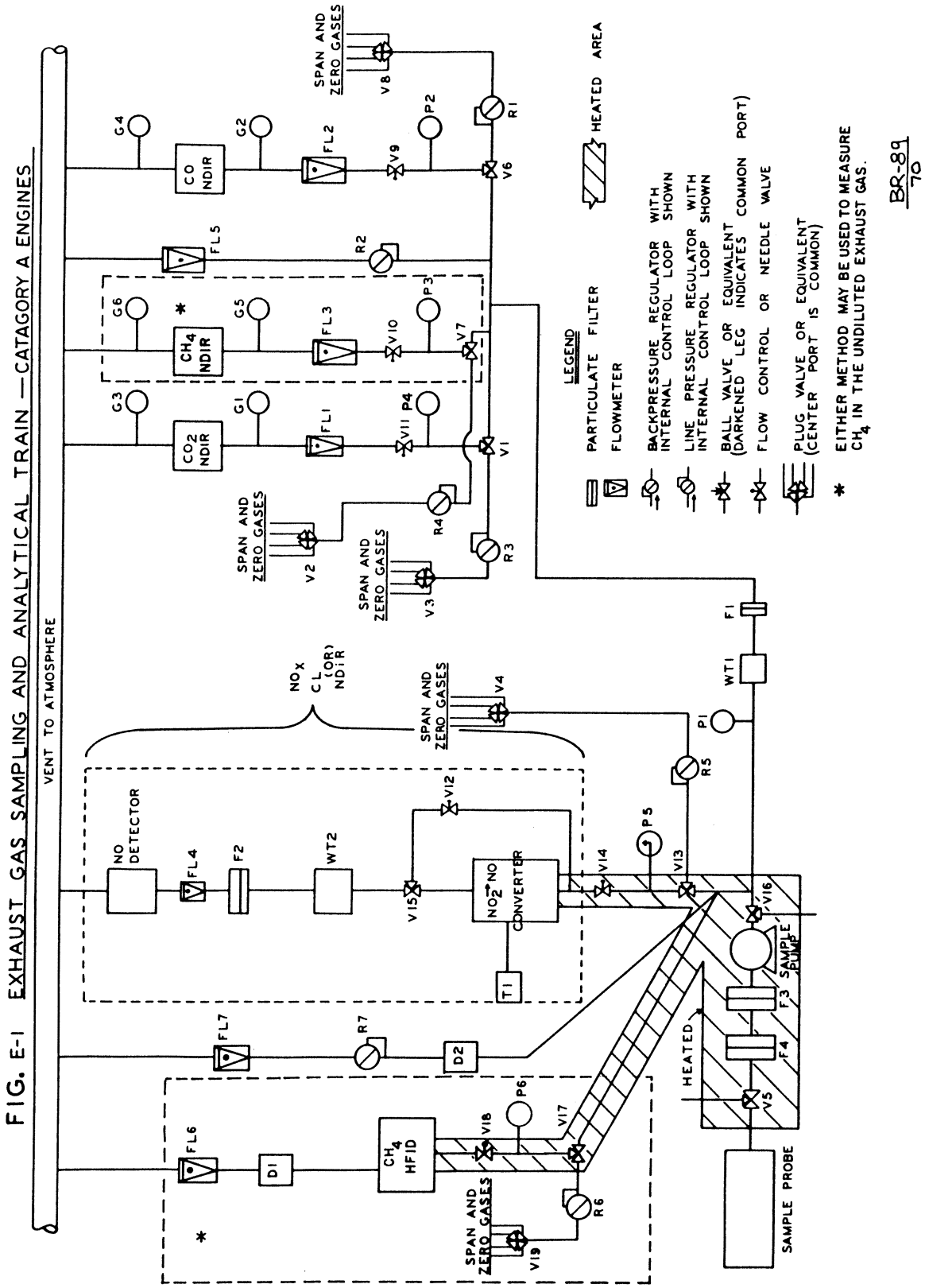

FIG. E-1 EXHAUST GAS SAMPLING AND ANALYTICAL TRAIN—CATAGORY A ENGINES

BILLING CODE 4510–43–C

(2) The schematic of the gaseous sampling system shown in Figure E–2 shall be used for testing category B engines. Various configurations of Figure E–2 may produce equivalent results. The components are designated as follows—

(i) Filters—F1, F2, F3, and F4;

(ii) Flowmeters—FL1, FL2, FL3, and FL4;

(iii) Upstream Gauges—G1, and G2;

(iv) Downstream Gauges—G3, and G4;

(v) Pressure Gauges—P1, P2, P3, and P4;

(vi) Regulators—R1, R2, R3, and R4;

(vii) Selector Valves—V1, V2, V3, V4, V6, and V7;

(viii) Heated Selector Valves—V5, V8, and V12;

(ix) Flow Control Valves—V9, V10, V11;

(x) Heated Flow Control Valves—V13;

(xi) Pump—Sample Transfer Pump;

(xii) Temperature Sensor—(T1); and

(xiii) Water traps—WT1 and WT2.

(A) Water removal from the sample shall be done by condensation.

(B) The sample gas temperature or dew point shall be monitored either within the water trap or downstream of the water trap and shall not exceed 45 °F (7 °C).

(C) Chemical dryers are not permitted.

(3) All components or parts of components that are in contact with the sample gas or corrosive calibration gases shall be corrosion-resistant material.

BILLING CODE 4510–43–P

FIG. E-2 EXHAUST GAS SAMPLING AND ANALYTICAL TRAIN-CATAGORY B ENGINES

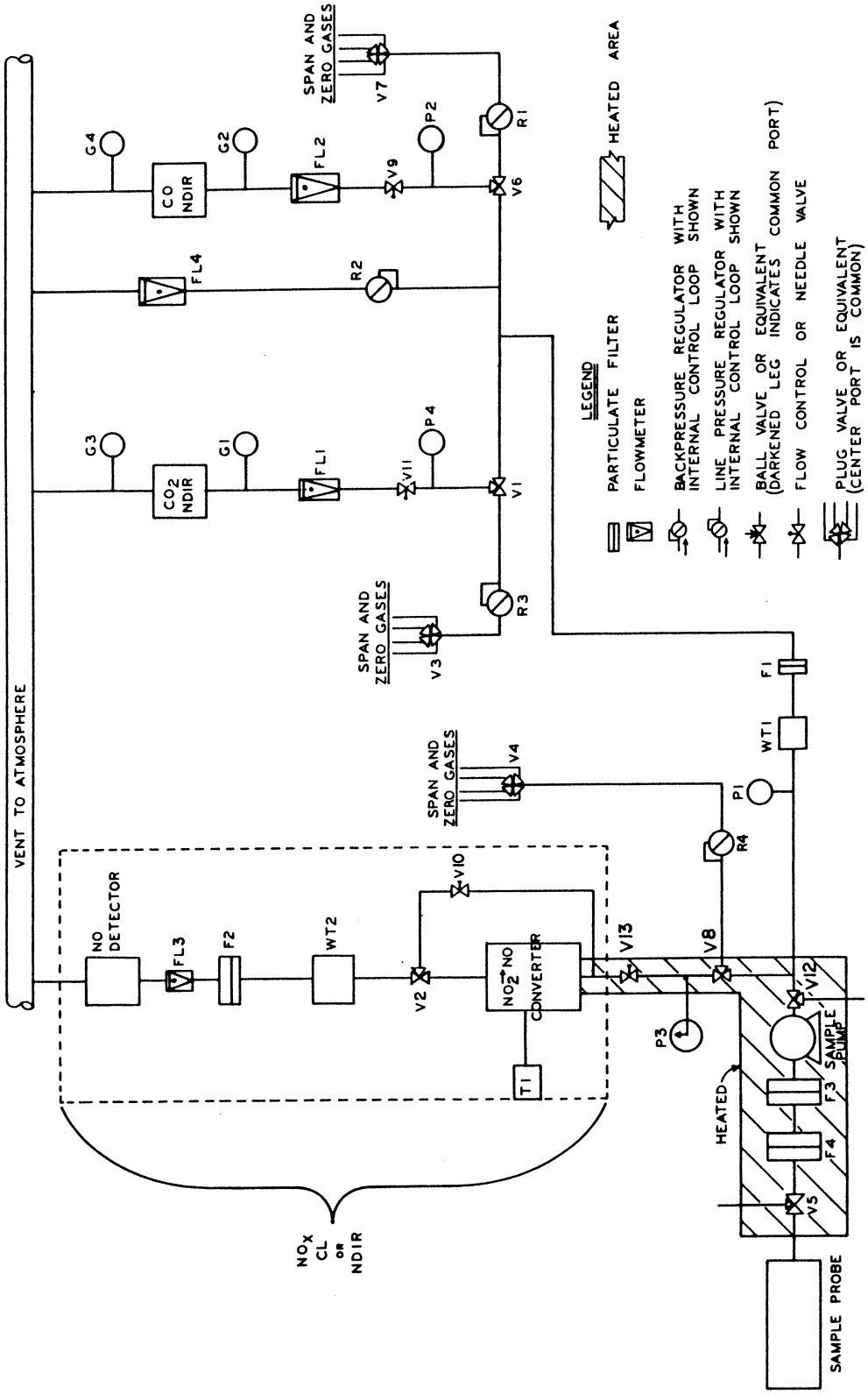

BILLING CODE 4510–43–C

(4) All analyzers shall obtain the sample to be analyzed from the same sample probe.

(5) CO and CO_2 measurements shall be made on a dry basis.

(6) Calibration or span gases for the NO_X measurement system shall pass through the NO_2 to NO converter.

(7) A stainless steel sample probe shall be straight, closed-end, multi-holed, and shall be placed inside the exhaust pipe.

(i) The probe length shall be at least 80 percent of the diameter of the exhaust pipe.

(ii) The inside diameter of the sample probe shall not be greater than the inside diameter of the sample line.

(iii) The heated sample line shall have a 0.197 inch (5 mm) minimum and a 0.53 inch (13.5 mm) maximum inside diameter.

(iv) The wall thickness of the probe shall not be greater than 0.040 inch (1 mm).

(v) There shall be a minimum of 3 holes in 3 different radial planes sized to sample approximately the same flow.

(8) The sample probe shall be located in the exhaust pipe at a minimum distance of 1.6 feet (0.5 meters) or 3 times the diameter of the exhaust pipe, whichever is the larger, from the exhaust manifold outlet flange or the outlet of the turbocharger. The exhaust gas temperature at the sample probe shall be a minimum of 158° F (70° C).

(9) The maximum allowable leakage rate on the vacuum side of the analyzer pump shall be 0.5 percent of the in-use flow rate for the portion of the system being checked.

(10) *General analyzer specifications.*

(i) The total measurement error, including the cross sensitivity to other gases, (paragraphs (b)(11)(ii), (b)(12)(iii), (b)(13)(iii), and (b)(13)(iv) of this section), shall not exceed ±5 percent of the reading or ±3.5 percent of full scale, whichever is smaller. For concentrations of less than 100 ppm the measurement error shall not exceed ±4 ppm.

(ii) The repeatability, defined as 2.5 times the standard deviation of 10 repetitive responses to a given calibration or span gas, must be no greater than ±1 percent of full scale concentration for each range used above 155 parts per million (ppm) or parts per million equivalent carbon (ppmC) or ±2 percent of each range used below 155 ppm (or ppmC).

(iii) The analyzer peak to peak response to zero and calibration or span gases over any 10 second period shall not exceed 2 percent of full scale on all ranges used.

(iv) The analyzer zero drift during a 1-hour period shall be less than 2 percent of full scale on the lowest range used. The zero-response is the mean response, including noise, to a zero gas during a 30-second time interval.

(v) The analyzer span drift during a 1-hour period shall be less than 2 percent of full scale on the lowest range used. The analyzer span is defined as the difference between the span response and the zero response. The span response is the mean response, including noise, to a span gas during a 30-second time interval.

(11) *CO and CO_2* analyzer specifications.

(i) Measurements shall be made with nondispersive infrared (NDIR) analyzers.

(ii) For the CO analyzer, the water and CO_2 interference shall be less than 1 percent of full scale for ranges equal to or greater than 300 ppm (3 ppm for ranges below 300 ppm) when a CO_2 span gas concentration of 80 percent to 100 percent of full scale of the maximum operating range used during testing is bubbled through water at room temperature.

(12) For NO_X analysis using a chemiluminescence (CL) analyzer the following parameters shall apply:

(i) From the sample point to the NO_2 to NO converter, the NO_X sample shall be maintained between 131° F (55° C) and 392° F (200° C).

(ii) The NO_2 to NO converter efficiency shall be at least 90 percent.

(iii) The quench interference from CO_2 and water vapor must be less than 3.0 percent.

(13) For NO_X analysis using an NDIR analyzer system the following parameters shall apply:

(i) The system shall include a NO_2 to NO converter, a water trap, and a NDIR analyzer.

(ii) From the sample point to the NO_2 to NO converter, the NO_X sample shall be maintained between 131° F (55° C) and 392° F (200° C).

(iii) The minimum water rejection ratio (maximum water interference) for the NO_X NDIR analyzer shall be 5,000:1.

(iv) The minimum CO_2 rejection ratio (maximum CO_2 interference) for the NO_X NDIR analyzer shall be 30,000:1.

(14) When CH_4 is measured using a heated flame ionization detector (HFID) the following shall apply:

(i) The analyzer shall be equipped with a constant temperature oven that houses the detector and sample-handling components.

(ii) The detector, oven, and sample-handling components shall be suitable for continuous operation at temperatures of 374° F (190° C) ± 18° F (10° C).

(iii) The analyzer fuel shall contain 40 ± 2 percent hydrogen. The balance shall be helium. The mixture shall contain ≤ 1 part per million equivalent carbon (ppmC), and ≤ 400 ppm CO.

(iv) The burner air shall contain < 2 ppmC hydrocarbon.

(v) The percent of oxygen interference shall be less than 5 percent.

(15) An NDIR analyzer for measuring CH_4 may be used in place of the HFID specified in paragraph (b)(14) of this section and shall conform to the requirements of paragraph (b)(10) of this section. Methane measurements shall be made on a dry basis.

(16) Calibration gas values shall be traceable to the National Institute for Standards and Testing (NIST), ''Standard Reference Materials'' (SRM's). The analytical accuracy of the calibration gas values shall be within 2.0 percent of NIST gas standards.

(17) Span gas values shall be traceable to NIST SRM's. The analytical accuracy of the span gas values shall be within 2.0 percent of NIST gas standards.

(18) Calibration or span gases for the CO and CO_2 analyzers shall have purified nitrogen as a diluent. Calibration or span gases for the CH_4 analyzer shall be CH_4 with purified synthetic air or purified nitrogen as diluent.

(19) Calibration or span gases for the NO_X analyzer shall be NO with a maximum NO_2 concentration of 5 percent of the NO content. Purified nitrogen shall be the diluent.

(20) Zero-grade gases for the CO, CO_2, CH_4 , and NO_X analyzers shall be either purified synthetic air or purified nitrogen.

(21) The allowable zero-grade gas (purified synthetic air or purified nitrogen) impurity concentrations shall not exceed ≤ 1ppm C, ≤ 1 ppm CO, ≤ 400 ppm CO_2, and ≤ 0.1 ppm NO.

(22) The calibration and span gases may also be obtained by means of a gas divider. The accuracy of the mixing device must be such that the concentration of the diluted calibration gases are within 2 percent.

(c) Particulate sampling system shall be used in determining the particulate index. A schematic of a full flow (single dilution) particulate sampling system for testing under this subpart is shown in Figures E–3 and E–4.

(1) The dilution system shall meet the following parameters:

(i) Either a positive displacement pump (PDP) or a critical flow venturi (CFV) shall be used as the pump/mass measurement device shown in Figure E–3.

(ii) The total volume of the mixture of exhaust and dilution air shall be measured.

(iii) All parts of the system from the exhaust pipe up to the filter holder, which are in contact with raw and diluted exhaust gas, shall be designed to minimize deposition or alteration of the particulate.

(iv) All parts shall be made of electrically conductive materials that do not react with exhaust gas components.

(v) All parts shall be electrically grounded to prevent electrostatic effects.

(vi) Systems other than full flow systems may also be used provided they yield equivalent results where:

(A) A seven sample pair (or larger) correlation study between the system under consideration and a full flow dilution system shall be run concurrently.

(B) Correlation testing is to be performed at the same laboratory, test cell, and on the same engine.

(C) The equivalency criterion is defined as a ± 5 percent agreement of the sample pair averages.

(2) The mass of particulate in the exhaust shall be collected by filtration. The exhaust temperature immediately before the primary particulate filter shall not exceed 125° F (52.0° C).

(3) Exhaust system backpressure shall not be artificially lowered by the PDP, CFV systems or dilution air inlet system. Static exhaust backpressure measured with the PDP or CFV system operating shall remain within ± 0.44 inches Hg (1.5 kPa) of the static pressure measured without being connected to the PDP or CFV at identical engine speed and load.

(4) The gas mixture temperature shall be measured at a point immediately ahead of the pump or mass measurement device.

(i) Using PDP, the gas mixture temperature shall be maintained within ± 10° F (6.0° C) of the average operating temperature observed during the test, when no flow compensation is used.

(ii) Flow compensation can be used provided that the temperature at the inlet to the PDP does not exceed 122° F (50° C).

(iii) Using CFV, the gas mixture temperature shall be maintained within ± 20° F (11° C) of the average operating temperature observed during the test, when no flow compensation is used.

(5) The heat exchanger shall be of sufficient capacity to maintain the temperature within the limits required above and is optional if electronic flow compensation is used.

(6) When the temperature at the inlet of either the PDP or CFV exceeds the limits stated in either paragraphs (c)(4)(i) or (c)(4)(iii) of this section, an electronic flow compensation system shall be required for continuous measurement of the flow rate and control of the proportional sampling in the particulate sampling system.

(7) The flow capacity of the system shall be large enough to eliminate water condensation.

BILLING CODE 4510–43–P

FIG. E-3 DILUTION TUNNEL/CONSTANT VOLUME SYSTEM

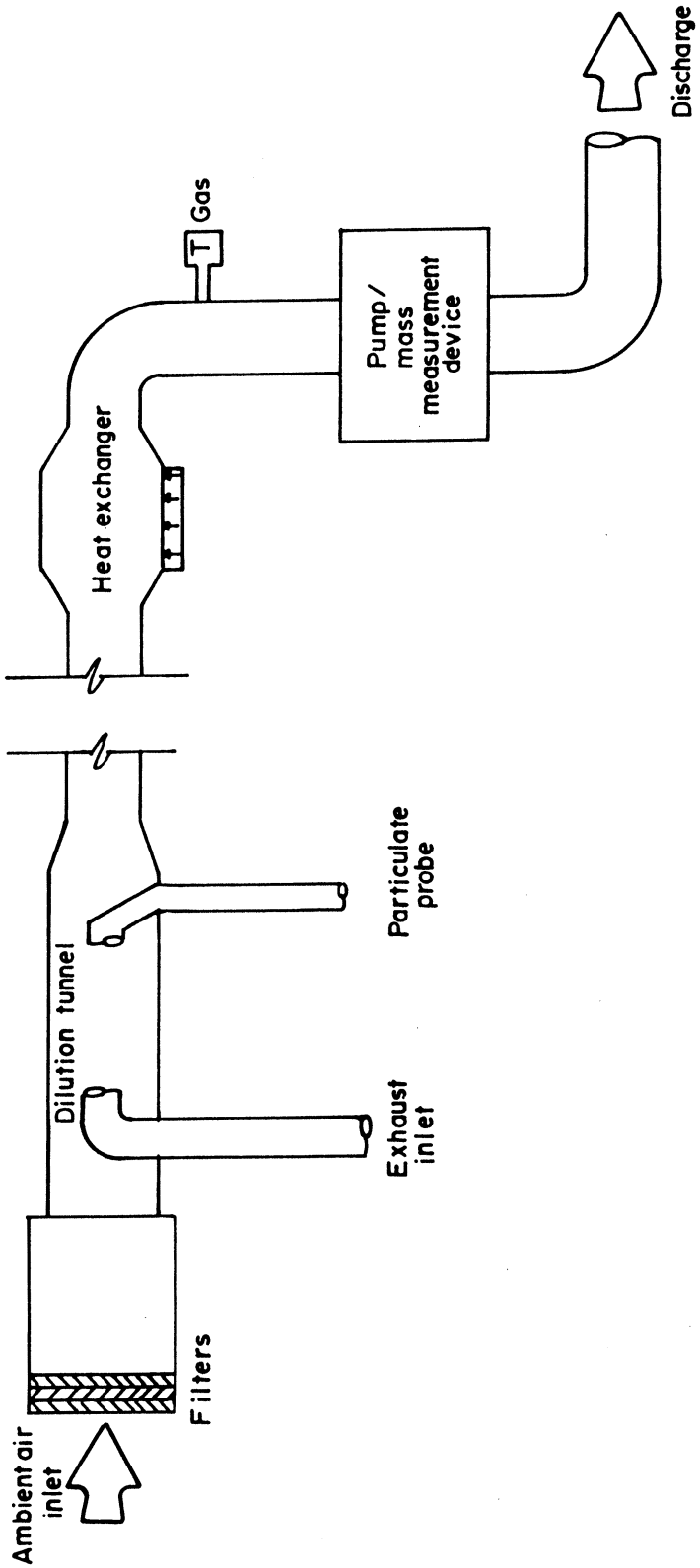

BR-89/68

FIG. E-4 PARTICULATE SAMPLING SYSTEM

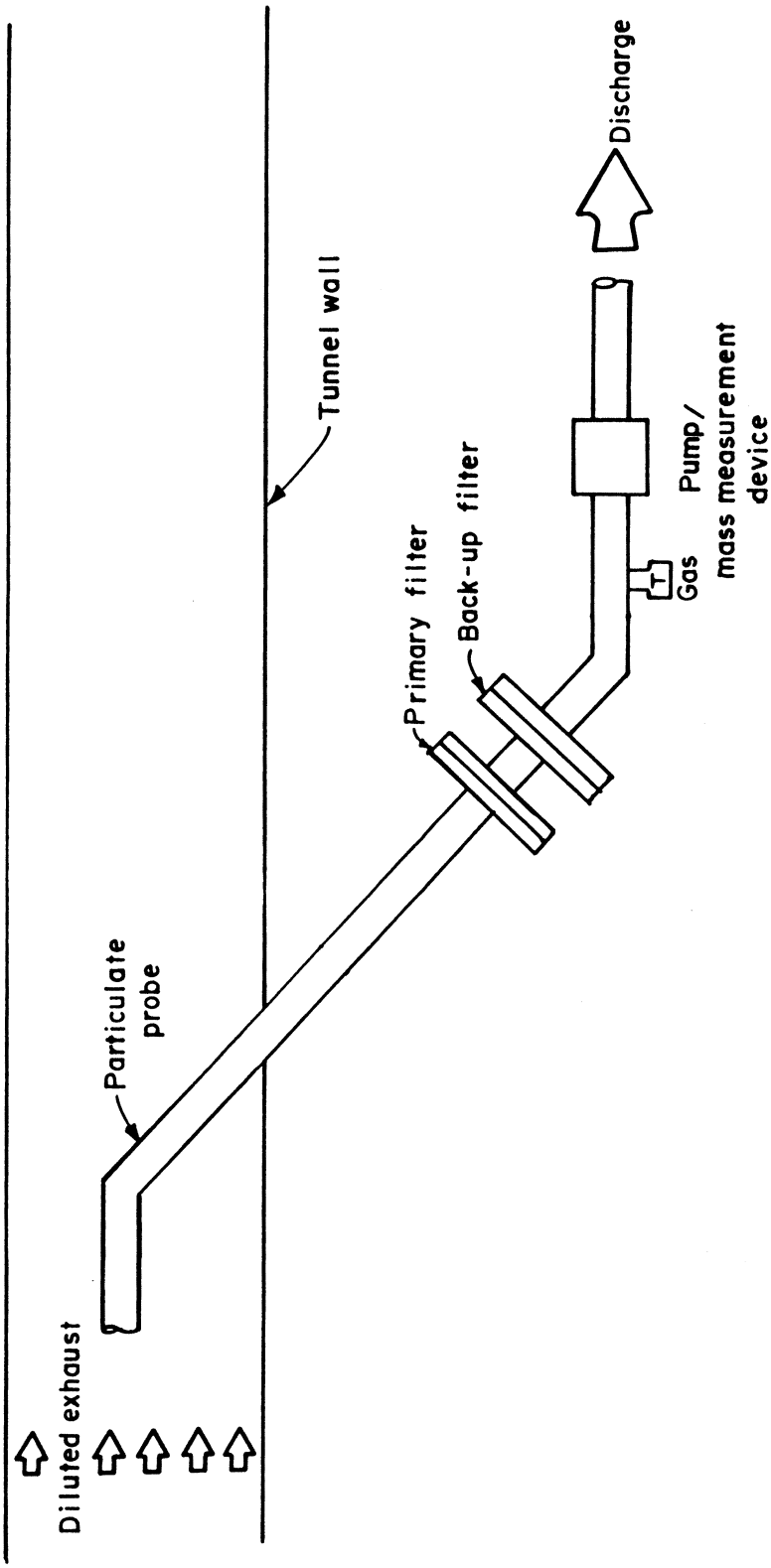

BR-89/71

BILLING CODE 4510–43–C

(8) The flow capacity of the PDP or CFV system using single dilution shall maintain the diluted exhaust at 125 °F (52.0° C) or less immediately before the primary particulate filter.

(9) The flow capacity of the PDP or CFV system using a double dilution system shall be sufficient to maintain the diluted exhaust in the dilution tunnel at 375° F (191° C) or less at the sampling zone.

(10) The secondary dilution system shall provide sufficient secondary dilution air to maintain the double-diluted exhaust stream at 125° F (52.0° C) or less immediately before the primary particulate filter.

(11) The gas flow meters or the mass flow measurement instrumentation shall have a maximum error of the measured value within ±2 percent of reading.

(12) The dilution air shall have a temperature of 77° F±9° F (25° C±5° C), and be—

(i) Filtered at the air inlet; or

(ii) Sampled to determine background particulate levels, which can then be subtracted from the values measured in the exhaust stream.

(13) The dilution tunnel shall have the following specifications:

(i) Be small enough in diameter to cause turbulent flow (Reynolds number greater than 4,000) and of sufficient length to cause complete mixing of the exhaust and dilution air;

(ii) Be at least 3 inches (75 mm) in diameter; and

(iii) Be configured to direct the engine exhaust downstream at the point where it is introduced into the dilution tunnel for thorough mixing.

(14) The exhaust pipe length from the exit of the engine exhaust manifold or turbocharger outlet to the dilution tunnel shall not exceed a total length of 32 feet (10 m).

(i) When the exhaust pipe exceeds 12 feet (4 m), then all pipe in excess of 12 feet (4 m) shall be insulated with a radial thickness of at least 1.0 inch (25 mm) and the thermal conductivity of the insulating material shall be no greater than 0.1 W/mK measured at 752° F (400° C).

(ii) To reduce the thermal inertia of the exhaust pipe, the thickness to diameter ratio shall be 0.015 or less.

(iii) The use of flexible sections shall be limited to the length to diameter ratio of 12 or less.

(15) The particulate sample probe shall—

(i) Be installed in the dilution tunnel facing upstream, on the dilution tunnel centerline, and approximately 10 dilution tunnel diameters downstream of the point where the engine's exhaust enters the dilution tunnel; and

(ii) Have 0.5 inches (12 mm) minimum inside diameter.

(16) The inlet gas temperature to the particulate sample pump or mass measurement device shall remain a constant temperature of ±5° F (3.0° C) if flow compensation is not used.

(17) The secondary dilution portion of the double dilution system shall have:

(i) A particulate transfer tube shall have a 0.5 inch (12 mm) minimum inside diameter not to exceed 40 inches (1020 mm) in length measured from the probe tip to the secondary dilution tunnel has:

(A) An inlet with the transfer tube facing upstream in the primary dilution tunnel, centerline, and approximately 10 dilution tunnel diameters downstream of the point where the engine's exhaust enters the dilution tunnel.

(B) An outlet where the transfer tube exits on the centerline of the secondary tunnel and points downstream.

(ii) A secondary tunnel that has a minimum diameter of 3.0 inches (75 mm), and of sufficient length to provide a residence time of at least 0.25 seconds for the double-diluted sample.

(iii) Secondary dilution air supplied at a temperature of 77 °F ± 9° F(25° C±5° C).

(iv) A primary filter holder located within 12.0 inches (300 mm) of the exit of the secondary tunnel.

(18) The particulate sampling filters shall—

(i) Be fluorocarbon-coated glass fiber filters or fluorocarbon-based (membrane) filters and have a 0.3 μm di-octylphthalate (DOP) collection efficiency of at least 95 percent at a gas face velocity between 35 and 80 cm/s.;

(ii) Have a minimum diameter of 1.85 inches (47 mm), 1.46 inches (37 mm) stain diameter;

(iii) Have a minimum filter loading ratio of 0.5mg/1075 mm^2 stain area for the single filter method.

(iv) Have minimum filter loading such that the sum of all eight (8) multiple filters is equal to the minimum loading value (mg) for a single filter multiplied by the square root of eight (8).

(v) Be sampled at the same time by a pair of filters in series (one primary and one backup filter) so that:

(A) The backup filter holder shall be located no more than 4 inches (100 mm) downstream of the primary filter holder.

(B) The primary and backup filters shall not be in contact with each other.

(C) The filters may be weighed separately or as a pair with the filters placed stain side to stain side.

(D) The single filter method incorporates a bypass system for passing the sample through the filters at the desired time.

(vi) Have a pressure drop increase between the beginning and end of the test of no more than 7.4 in Hg (25kPa).

(vii) Filters of identical quality shall be used when performing correlation tests specified in paragraph (c)(1)(vi) of this section.

(19) *Weighing chamber specifications.*

(i) The temperature of the chamber (room) in which the particulate filters are conditioned and weighed shall be maintained to within 72 °F±5 °F (22 °C±3 °C) during all filter conditioning and weighing.

(ii) The humidity of the chamber (room) in which the particulate filters are conditioned and weighed shall be maintained to a dewpoint of 49 °F±5 °F (9.5 °C±3 °C) and a relative humidity of 45 percent ±8 percent during all filter conditioning and weighing.

(iii) The chamber (room) environment shall be free of any ambient contaminants (such as dust) that would settle on the particulate filters during their stabilization. This shall be determined as follows:

(A) At least two unused reference filters or reference filter pairs shall be weighed within four (4) hours of, but preferably at the same time as the sample filter (pair) weighings.

(B) The reference filters are to be the same size and material as the sample filters.

(C) If the average weight of reference filters (reference filter pairs) changes between sample filter weighings by more than ±5.0 percent (±7.5 percent for the filter pair respectively) of the recommended minimum filter loading in paragraphs (c)(18)(iii) or (c)(18)(iv) of this section, then all sample filters shall be discarded and the tests repeated.

(20) The analytical balance used to determine the weights of all filters shall have a precision (standard deviation) of 20 μg and resolution of 10 μg. For filters less than 70 mm diameter, the precision and resolution shall be 2 μg and 1 μg, respectively.

(21) All filters shall be neutralized to eliminate the effects of static electricity prior to weighing.

§ 7.87 Test to determine the maximum fuel-air ratio.

(a) *Test procedure.*

(1) Couple the diesel engine to the dynamometer and connect the sampling and measurement devices specified in § 7.86.

(2) Prior to testing, zero and span the CO and NO_X analyzers to the lowest analyzer range that will be used during this test.

(3) While running the engine, the following shall apply:

(i) The parameter for the laboratory atmospheric factor, f_a, shall be: $0.98 \leq f_a \leq 1.02$;

(A) The equation is $f_a=(99/P_s) * ((T_a+273)/298)^{0.7}$ for a naturally aspirated and mechanically supercharged engines; or

(B) The equation is $f_a=(99/P_s)^{0.7} * ((T_a+273)/298)^{1.5}$ for a turbocharged engine with or without cooling of the intake air.

Where:

P_s=dry atmospheric pressure (kPa)

T_a=intake air temperature (°C)

(ii) The air inlet restriction shall be set within ±10 percent of the recommended maximum air inlet restriction as specified by the engine manufacturer at the engine operating condition giving maximum air flow to determine the concentration of CO as specified in paragraph (a)(6) of this section.

(iii) The exhaust backpressure restriction shall be set within ±10 percent of the maximum exhaust backpressure as specified by the engine manufacturer at the engine operating condition giving maximum rated horsepower to determine the concentrations of CO and NO_X as specified in paragraph (a)(6)of this section.

(iv) The air inlet restriction shall be set within ±10 percent of a recommended clean air filter at the engine operating condition giving maximum air flow as specified by the engine manufacturer to determine the concentration of NO_X as specified in paragraph (a)(6) of this section.

(4) The engine shall be at a steady-state condition when the exhaust gas samples are collected and other test data is measured.

(5) In a category A engine, 1.0±0.1 percent CH_4 shall be injected into the engine's intake air.

(6) Operate the engine at several speed/torque conditions to determine the concentrations of CO and NO_X, dry basis, in the raw exhaust.

(b) *Acceptable performance.* The CO and NO_X concentrations in the raw exhaust shall not exceed the limits specified in § 7.84(b) throughout the specified operational range of the engine.

§ 7.88 Test to determine the gaseous ventilation rate.

The test shall be performed in the order listed in Table E–2. The test for determination of the particulate index described in § 7.89 may be done simultaneously with this test.

(a) *Test procedure.*

(1) Couple the diesel engine to the dynamometer and attach the sampling and measurement devices specified in § 7.86.

(2) A minimum time of 10 minutes is required for each test mode.

(3) CO, CO_2, NO_X, and CH_4 analyzers shall be zeroed and spanned at the analyzer range to be used prior to testing.

(4) Run the engine.

(i) The parameter for f_a shall be calculated in accordance with § 7.87(a)(3).

(ii) The air inlet and exhaust backpressure restrictions on the engine shall be set as specified in §§ 7.87(a)(3)(iii) and (iv).

(5) The engine shall be at a steady-state condition before starting the test modes.

(i) The output from the gas analyzers shall be measured and recorded with exhaust gas flowing through the analyzers a minimum of the last three (3) minutes of each mode.

(ii) To evaluate the gaseous emissions, the last 60 seconds of each mode shall be averaged.

(iii) A 1.0±0.1 percent CH_4, by volume, shall be injected into the engine's intake air for category A engines.

(iv) The engine speed and torque shall be measured and recorded at each test mode.

(v) The data required for use in the gaseous ventilation calculations specified in paragraph (a)(9) of this section shall be measured and recorded at each test mode.

(6) Operate the engine at each rated speed and horsepower rating requested by the applicant according to Table E–2 in order to measure the raw exhaust gas concentration, dry basis, of CO, CO_2, NO, and NO_2, and CH_4- exhaust (category A engines only).

(i) Test speeds shall be maintained within ±1 percent of rated speed or ±3 RPM, which ever is greater, except for low idle which shall be within the tolerances established by the manufacturer.

(ii) The specified torque shall be held so that the average over the period during which the measurements are taken is within ±2 percent of the maximum torque at the test speed.

(7) The concentration of CH_4 in the intake air shall be measured for category A engines.

TABLE E–2.—GASEOUS TEST MODES

Speed	Rated speed				Intermediate speed			Low-idle speed
% Torque	100	75	50	10	100	75	50	0

(8) After completion of the test modes, the following shall be done:

(i) Zero and span the analyzers at the ranges used during the test.

(ii) The gaseous emission test shall be acceptable if the difference in the zero and span results taken before the test and after the test are less than 2 percent.

(9) The gaseous ventilation rate for each exhaust gas contaminant shall be calculated as follows—

(i) The following abbreviations shall apply to both category A and category B engine calculations as appropriate:

cfm—Cubic feet per min (ft^3/min)

Exh—Exhaust

A—Air (lbs/hr)

H—Grains of water per lb. of dry intake air

J—Conversion factor

m—Mass flow rate (mass/hr)

TI—Intake air temperature (° F)

PCAir—Percent Air

$PCCH_4$—Percent CH_4 (intake air)

UCH_4—Unburned CH_4

$PCECH_4$—Percent Exhaust CH_4

(ii) Exhaust gas flow calculation for category B engines shall be (m Exh)=(A)+(m fuel).

(iii) Fuel/air ratio for category B engines shall be (f/a)=(m fuel) / (A).

(iv) Methane flow through category A engines shall be determined by the following:

$PCAir=100-PCCH_4$

$Y=(PCAir)(0.289)+(PCCH_4)(0.16)$

$Z=(0.16)(PCCH_4)\div Y$

$mCH_4=(A)(Z)\div(1-Z)$

(v) Exhaust gas flow calculation for category A engines shall be (m Exh)=(A)+(m fuel)+(m CH_4)

(vi) Unburned CH_4 (lbs/hr) calculation for category A engines shall be mUCH_4=(m Exh)(0.00552)(PCECH_4)

(vii) Fuel/air ratio for category A engines shall be (f/a)=((m fuel)+(m CH_4)−(m UCH_4))÷(A)

(viii) Conversion from dry to wet basis for both category A and category B engines shall be:

(NO wet basis)=(NO dry basis)(J)
(NO_2 wet basis)=(NO_2 dry basis)(J)
(CO_2 wet basis)=(CO_2 dry basis)(J)
(CO wet basis)=(CO dry basis)(10^{-4})(J)

Where:

J=(f/a)(−1.87)+(1−(0.00022)(H))

(ix) NO and NO_2 correction for humidity and temperature for category A and category B engines shall be:

(NO corr)=(NO wet basis)÷(E)
(NO_2 corr)=(NO_2 wet basis)÷(E)

Where:

E=1.0+(R)(H−75)+(G)(TI−77)
R=(f/a)(0.044)−(0.0038)
G=(f/a)(−0.116)+(0.0053)

(x) The calculations to determine the m of each exhaust gas contaminant in grams per hour at each test point shall be as follows for category A and category B engines:

(m NO)=(NO corr)(0.000470)(m Exh)
(m NO_2)=(NO_2 corr)(0.000720)(m Exh)
(m CO_2)=(CO_2 wet basis)(6.89)(m Exh)
(m CO)=(CO wet basis)(4.38)(m Exh)

(xi) The calculations to determine the ventilation rate for each exhaust gas contaminant at each test point shall be as follows for category A and category B engines:

(cfm NO)=(m NO)(K)
(cfm NO_2)=(m NO_2)(K)
(cfm CO_2)=(m CO_2)(K)
(cfm CO)=(m CO)(K)

Where:

K=13,913.4 (pollutant grams/mole)
(pollutant dilution value specified in § 7.84(c)).

(b) The gaseous ventilation rate for each requested rated speed and horsepower shall be the highest ventilation rate calculated in paragraph (a)(9)(xi) of this section.

(1) Ventilation rates less than 20,000 cfm shall be rounded up to the next 500 cfm.

Example: 10,432 cfm shall be listed 10,500 cfm.

(2) Ventilation rates greater than 20,000 cfm shall be rounded up to the next 1,000 cfm.

Example: 26,382 cfm shall be listed 27,000 cfm.

§ 7.89 Test to determine the particulate index.

The test shall be performed in the order listed in Table E–3.

(a) *Test procedure.*

(1) Couple the diesel engine to the dynamometer and connect the sampling and measurement devices specified in § 7.86.

(2) A minimum time of 10 minutes is required for each measuring point.

(3) Prior to testing, condition and weigh the particulate filters as follows:

(i) At least 1 hour before the test, each filter (pair) shall be placed in a closed, but unsealed, petri dish and placed in a weighing chamber (room) for stabilization.

(ii) At the end of the stabilization period, each filter (pair) shall be weighed. The reading is the tare weight.

(iii) The filter (pair) shall then be stored in a closed petri dish or a filter holder, both of which shall remain in the weighing chamber (room) until needed for testing.

(iv) The filter (pair) must be re-weighed if not used within 8 hours of its removal from the weighing chamber (room).

(4) Run the engine.

(i) The parameter for f_a shall be calculated in accordance with § 7.87(a)(3).

(ii) The air inlet and exhaust backpressure restrictions on the engine shall be set as specified in §§ 7.87(a)(3)(iii) and (iv).

(iii) The dilution air shall be set to obtain a maximum filter face temperature of 125° F (52° C) or less at each test mode.

(iv) The total dilution ratio shall not be less than 4.

(5) The engine shall be at a steady state condition before starting the test modes.

(i) The engine speed and torque shall be measured and recorded at each test mode.

(ii) The data required for use in the particulate index calculation specified in paragraph (a)(9) of this section shall be measured and recorded at each test mode.

(6) A 1.0±0.1 percent CH_4, by volume shall be injected into the engine's intake air for category A engines.

(7) Operate the engine at each rated speed and horsepower rating requested by the applicant according to Table E–3 to collect particulate on the primary filter.

(i) One pair of single filters shall be collected or eight multiple filter pairs shall be collected.

(ii) Particulate sampling shall be started after the engine has reached a steady-state condition.

(iii) The sampling time required per mode shall be either a minimum of 20 seconds for the single filter method or a minimum of 60 seconds for the multiple filter method.

(iv) The minimum particulate loading specified in §§ 7.86(c)(18) (iii) or (iv) shall be done.

TABLE E–3.—PARTICULATE TEST MODES

Speed	Rated speed				Intermediate speed			Low-idle speed
% Torque	100	75	50	10	100	75	50	0
Weighting factor	0.15	0.15	0.15	0.1	0.1	0.1	0.1	0.15

(v) Test speeds shall be maintained within ± percent of rated speed or ±3 RPM, which ever is greater, except for low idle which shall be within the tolerances set by the manufacturer.

(vi) The specified torque shall be held so that the average over the period during which the measurements are being taken is within ±2 percent of the maximum torque at the test speed.

(vii) The modal weighting factors (WF) given in Table E–3 shall be applied to the multiple filter method during the calculations as shown in paragraph (a)(9)(iii)(B) of this section.

(viii) For the single filter method, the modal WF shall be taken into account during sampling by taking a sample proportional to the exhaust mass flow for each mode of the cycle.

(8) After completion of the test, condition and weigh the particulate filters in the weighing chamber (room) as follows:

(i) Condition the filters for at least 1 hour, but not more than 80 hours.

(ii) At the end of the stabilization period, weigh each filter. The reading is the gross weight.

(iii) The particulate mass of each filter is its gross weight minus its tare weight.

(iv) The particulate mass (P_F for the single filter method; $P_{F,i}$ for the multiple filter method) is the sum of the particulate masses collected on the primary and back-up filters.

(v) The test is void and must be rerun if the sample on the filter contacts the petri dish or any other surface.

(9) The particulate index for the mass particulate shall be calculated from the equations listed below—

(i) The following abbreviations shall be:

cfm—Cubic feet per min (ft^3 min)
PT—Particulate (gr/hr)
m mix—Diluted exhaust gas mass flow rate on wet basis (kg/hr)
m sample—Mass of the diluted exhaust sample passed through the particulate sampling filters (kg)
P_F—Particulate sample mass collected on a filter (mg) at each test mode as determined in Table E–3.
K_p—Humidity correction factor for particulate
WF—Weighting factor
i-Subscript denoting an individual mode, i=1, . . . n
PI—Particulate Index (cfm)

(ii) When calculating ambient humidity correction for the particulate concentration (P_F part), the equation shall be:

$P_{fcorr}=(P_f)(K_p)$
$K_p=1/(1+0.0133 * (H-10.71))$
Where:
H_a=humidity of the intake air, g water per kg dry air
$H_a=(6.220 * R_a * p_a)/(p_B - p_a - R_a * 10^{-2})$
R_a=relative humidity of the intake air, %
p_a=saturation vapor pressure of the intake air, kPa
p_B=total barometric pressure, kPa

(iii) When the multiple filter method is used, the following equations shall be used.

(A) Mass of particulate emitted is calculated as follows:

$$\text{PT gr / hr}_i = \frac{\left(P_{fcorr}\,\text{mg}_i\right)\left(\text{m mix kg /hr}_i\right)}{\left(\text{m sample kg}_i\right)\left(1000\text{ mg /gr}\right)}$$

(B) Determination of weighted particulate average is calculated as follows:

$$\text{PT gr /hr} = \sum_{i=1}^{i=n}\left(\text{PT gr /hr}_i\right)\left(\text{WF}_i\right)$$

(C) Determination of particulate index for the mass particulate from the average of the test modes shall be calculated as follows:

$$\text{PI} = \frac{\left(\text{PT gr /hr}\right)\left(1000\text{ mg /gr}\right)\left(1\text{ hr /60 min}\right)\left(35.31\text{ ft}^3\text{ /m}^3\right)}{\left(1/1\text{ mg /m}^3\right)}$$

(iv) When the single filter method is used, the following equations shall be used.

(A) Mass of particulate emitted:

$$\text{PT gr / hr} = \frac{\left(P_{Fcorr}\text{ mg}\right)\left(\text{m mix kg /hr}\right)\text{avg.}}{\left(\text{m sample kg}\right)\left(1000\text{ mg /gr}\right)}$$

Where:

$$\left(\text{m mix kg / hr}\right)\text{avg.} = \sum_{i=1}^{i=n}\left(\text{m mix kg / hr}_i\right)\left(\text{WF}_i\right)$$

$$\left(\text{m sample kg}\right) = \sum_{i=1}^{i=n}\left(\text{m sample kg}_i\right)$$

(B) Determination of particulate index for the mass particulate from the average of the test modes shall be as follows:

$$\text{PI} = \frac{\left(\text{PT gr /hr}\right)\left(1000\text{ mg /gr}\right)\left(1\text{ hr /60 min}\right)\left(35.31\text{ ft}^3\text{ /m}^3\right)}{\left(1/1\text{ mg /m}^3\right)}$$

(v) When the effective weighting factor, $WF_{E,i}$, for each mode is calculated for the single filter method, the following shall apply.

$$\text{(A)}\quad \text{WF}_{E,i} = \frac{\left(\text{m sample kg}_i\right)\left(\text{m mix kg /hr avg}\right)}{\left(\text{m sample kg}\right)\left(\text{m mix kg /hr}_i\right)}$$

(B) The value of the effective weighting factors shall be within ±0.005 (absolute value) of the weighting factors listed in Table E–3.

(b) A particulate index for each requested rated speed and horsepower shall be the value determined in paragraph (a)(9)(iii)(C) of this section for the multiple filter method or paragraph (a)(9)(iv)(B) of this section for the single filter method.

(1) Particulate indices less than 20,000 cfm shall be rounded up to the next 500 cfm. Example: 10,432 cfm shall be listed 10,500 cfm.

(2) Particulate indices greater than 20,000 cfm shall be rounded up to the nearest thousand 1,000 cfm. Example: 26,382 cfm shall be listed 27,000 cfm.

§ 7.90 Approval marking.

Each approved diesel engine shall be identified by a legible and permanent approval marking inscribed with the assigned MSHA approval number and securely attached to the diesel engine. The marking shall also contain the following information:

(a) Ventilation rate.

(b) Rated power.

(c) Rated speed.

(d) High idle.

(e) Maximum altitude before deration.

(f) Engine model number.

§ 7.91 Post-approval product audit.

Upon request by MSHA, but no more than once a year except for cause, the approval holder shall make a diesel engine available for audit at no cost to MSHA.

§ 7.92 New technology.

MSHA may approve a diesel engine that incorporates technology for which the requirements of this subpart are not applicable if MSHA determines that the diesel engine is as safe as those which meet the requirements of this subpart.

Subpart F—Diesel Power Packages Intended for Use in Areas of Underground Coal Mines Where Permissible Electric Equipment Is Required

Sec.

7.95 Purpose and effective date.
7.96 Definitions.
7.97 Application requirements.
7.98 Technical requirements.
7.99 Critical characteristics.
7.100 Explosion tests.
7.101 Surface temperature tests.
7.102 Exhaust gas cooling efficiency test.
7.103 Safety system control test.
7.104 Internal static pressure test.
7.105 Approval marking.
7.106 Post-approval product audit.
7.107 New technology.
7.108 Power package checklist.

Subpart F–Diesel Power Packages Intended for Use in Areas of Underground Coal Mines Where Permissible Electric Equipment is Required

§ 7.95 Purpose and effective date.

Part 7, subpart A general provisions apply to subpart F. Subpart F establishes the specific requirements for MSHA approval of diesel power packages intended for use in approved equipment in areas of underground coal mines where electric equipment is required to be permissible. It is effective November 25, 1996.

§ 7.96 Definitions.

In addition to the definitions in subparts A and E of this part, the following definitions apply in this subpart.

Cylindrical joint. A joint comprised of two contiguous, concentric, cylindrical surfaces.

Diesel power package. A diesel engine with an intake system, exhaust system, and a safety shutdown system installed.

Dry exhaust conditioner. An exhaust conditioner that cools the exhaust gas without direct contact with water.

Exhaust conditioner. An enclosure, containing a cooling system, through which the exhaust gases pass.

Exhaust system. A system connected to the outlet of the diesel engine which includes, but is not limited to, the exhaust manifold, the exhaust pipe, the exhaust conditioner, the exhaust flame arrester, and any adapters between the exhaust manifold and exhaust flame arrester.

Fastening. A bolt, screw, or stud used to secure adjoining parts to prevent the escape of flame from the diesel power package.

Flame arrester. A device so constructed that flame or sparks from the diesel engine cannot propagate an explosion of a flammable mixture through it.

Flame arresting path (explosion-proof joint). Two or more adjoining or adjacent surfaces between which the escape of flame is prevented.

Flammable mixture. A mixture of methane or natural gas with normal air, that will propagate flame or explode when ignited.

Grade. The slope of an incline expressed as a percent.

High idle speed. The maximum no load speed specified by the engine manufacturer.

Intake system. A system connected to the inlet of the diesel engine which includes, but is not limited to, the intake manifold, the intake flame arrester, the emergency intake air shutoff device, the air cleaner, and all piping and adapters between the intake manifold and air cleaner.

Plane joint. A joint comprised of two adjoining surfaces in parallel planes.

Safety shutdown system. A system which, in response to signals from various safety sensors, recognizes the existence of a potential hazardous condition and automatically shuts off the fuel supply to the engine.

Step (rabbet) joint. A joint comprised of two adjoining surfaces with a change or changes in direction between its inner and outer edges. A step joint may be composed of a cylindrical portion and a plane portion or of two or more plane portions.

Threaded joint. A joint consisting of a male- and female-threaded member, both of which are the same type and gauge.

Wet exhaust conditioner. An exhaust conditioner that cools the exhaust gas through direct contact with water, commonly called a water scrubber.

§ 7.97 Application requirements.

(a) An application for approval of a diesel power package shall contain sufficient information to document compliance with the technical requirements of this subpart and include: drawings, specifications, and descriptions with dimensions (including tolerances) demonstrating compliance with the technical requirements of § 7.98. The specifications and descriptions shall include the materials of construction and quantity. These shall include the following—

(1) A general arrangement drawing showing the diesel power package and the location and identification of the intake system, exhaust system, safety shutdown system sensors, flame arresters, exhaust conditioner, emergency intake air shutoff device, automatic fuel shutoff device and the engine.

(2) Diesel engine specifications including the MSHA approval number, the engine manufacturer, the engine model number, and the rated speed, rated horsepower, and fuel rate.

(3) A drawing(s) which includes the fan blade material specifications, the location and identification of all water-cooled components, coolant lines, radiator, surge tank, temperature sensors, and orifices; arrows indicating proper flow direction; the height relationship of water-cooled components to the surge tank; and the proper procedure for filling the cooling system.

(4) A drawing(s) showing the relative location, identification of components,

and design of the safety shutdown system.

(5) Specific component identification, or specific information including detail drawings that identify the characteristics of the cooling system and safety shutdown system that ensures compliance with the technical requirements.

(6) Detail drawings of gaskets used to form flame-arresting paths.

(7) An assembly drawing showing the location and identification of all intake system components from the air cleaner to the engine head.

(8) An assembly drawing showing the location and identification of all exhaust system components from the engine head to the exhaust outlet.

(9) Detail drawings of those intake and exhaust system components identified in paragraphs (a)(7) and (a)(8) of this section that ensure compliance with the technical requirements. An exhaust conditioner assembly drawing shall be provided showing the location, dimensions, and identification of all internal parts, exhaust inlet and outlet, sensors, and the exhaust gas path through the exhaust conditioner. If a wet exhaust conditioner is used, the exhaust conditioner assembly drawing must also show the location, dimensions, and identification of the fill port, drain port, low water check port; high or normal operating water level; minimum allowable low water level; and the maximum allowable grade that maintains explosion-proof operations.

(10) A power package checklist which shall consist of a list of specific features that must be checked and tests that must be performed to determine if a previously approved diesel power package is in approved condition. Test procedures shall be specified in sufficient detail to allow the evaluation to be made without reference to other documents. Illustrations shall be used to fully identify the approved configuration of the diesel power package.

(11) Information showing that the electrical systems and components meet the requirements of § 7.98.

(12) A drawing list consisting of a complete list of those drawings and specifications which show the details of the construction and design of the diesel power package.

(b) Composite drawings specifying the required construction details may be submitted instead of the individual drawings in paragraph (a) of this section.

(c) All documents shall be titled, dated, numbered, and include the latest revision.

(d) When all testing has been completed, the following information shall be submitted and become part of the approval documentation:

(1) The settings of any adjustable devices used to meet the performance requirements of this subpart.

(2) The coolant temperature sensor setting and exhaust gas temperature sensor setting used to meet the performance requirements of this subpart.

(3) The minimum allowable low water level and the low water sensor setting used to meet the performance requirements of this subpart for systems using a wet exhaust conditioner as the exhaust flame arrester.

(4) The maximum grade on which the wet exhaust conditioner can be operated retaining the flame arresting characteristics.

(5) A finalized version of the power package checklist.

§ 7.98 Technical requirements.

(a) The diesel power package shall use a category A diesel engine approved under subpart E of this part with the following additional requirements:

(1) A hydraulic, pneumatic, or other mechanically actuated starting mechanism. Other means of starting shall be evaluated in accordance with the provisions of § 7.107.

(2) If an air compressor is provided, the intake air line shall be connected to the engine intake system between the air cleaner and the flame arrester. If the air compressor's inlet air line is not connected to the engine's intake system, it shall have an integral air filter.

(b) The temperature of any external surface of the diesel power package shall not exceed 302 °F (150 °C).

(1) Diesel power package designs using water jacketing to meet this requirement shall be tested in accordance with § 7.101.

(2) Diesel power packages using other techniques will be evaluated under the provisions of § 7.107.

(3) When using water-jacketed components, provisions shall be made for positive circulation of coolant, venting of the system to prevent the accumulation of air pockets, and effective activation of the safety shutdown system before the temperature of the coolant in the jackets exceeds the manufacturer's specifications or 212° F (100° C), whichever is lower.

(c) External rotating parts shall not be constructed of aluminum alloys containing more than 0.6 percent magnesium.

(d) If nonmetallic rotating parts are used, they shall be provided with a means to prevent an accumulation of static electricity. Static conducting materials shall have a total resistance of 1 megohm or less, measured with an applied potential of 500 volts or more. Static conducting materials having a total resistance greater than 1 megohm will be evaluated under the provisions of § 7.107.

(e) All V-belts shall be static conducting and have a resistance not exceeding 6 megohms, when measured with a direct current potential of 500 volts or more.

(f) The engine crankcase breather shall not be connected to the air intake system of the engine. The discharge from the breather shall be directed away from hot surfaces of the engine and exhaust system.

(g) Electrical components on diesel power packages shall be certified or approved by MSHA under parts 7, 18, 20, and 27 of this chapter.

(h) Electrical systems on diesel power packages consisting of electrical components, interconnecting wiring, and mechanical and electrical protection shall meet the requirements of parts 7, 18, and 27 of this chapter, as applicable.

(i) The diesel power package shall be equipped with a safety shutdown system which will automatically shut off the fuel supply and stop the engine in response to signals from sensors indicating—

(1) The coolant temperature limit specified in paragraph (b) of this section;

(2) The exhaust gas temperature limit specified in paragraph (s)(4) of this section;

(3) The minimum allowable low water level, for a wet exhaust conditioner, as established by tests in § 7.100. Restarting of the engine shall be prevented until the water level in the wet exhaust conditioner has been replenished above the minimum allowable low water level; and

(4) The presence of other safety hazards such as high methane concentration, actuation of the fire suppression system, etc., if such sensors are included in the safety shutdown system.

(j) The safety shutdown system shall have the following features:

(1) A means to automatically disable the starting circuit and prevent engagement of the starting mechanism while the engine is running, or a starting mechanism constructed of nonsparking materials.

(2) If the design of the safety shutdown system requires that the lack of engine oil pressure must be overridden to start the engine, the

override shall not be capable of overriding any of the safety shutdown sensors specified in paragraph (i) of this section.

(k) The diesel power package shall be explosion-proof as determined by the tests set out in § 7.100.

(l) Engine joints that directly or indirectly connect the combustion chamber to the surrounding atmosphere shall be explosion-proof in accordance with paragraphs (m) through (q) of this section and § 7.100. This paragraph does not apply to the following:

(1) Pistons to piston rings;

(2) Pistons to cylinder walls;

(3) Piston rings to cylinder walls;

(4) Cylinder head to cylinder block;

(5) Valve stem to valve guide; or

(6) Injector body to cylinder head.

(m) Each segment of the intake system and exhaust system required to provide explosion-proof features shall be constructed of metal and designed to withstand a minimum internal pressure equal to four times the maximum pressure observed in that segment in tests under § 7.100 or a pressure of 150 psig, whichever is less. Castings shall be free from blowholes.

(n) Welded joints forming the explosion-proof intake and exhaust systems shall be continuous and gas-tight. At a minimum, they shall be made in accordance with American Welding Society Standard D14.4–77 or meet the test requirements of § 7.104 with the internal pressure equal to four times the maximum pressure observed in tests under § 7.100 or a pressure of 150 psig, whichever is less.

(o) Flexible connections shall be permitted in segments of the intake and exhaust systems required to provide explosion-proof features, provided that failure of the connection activates the safety shutdown system before the explosion-proof characteristics are lost.

(p) Flame-arresting paths in the intake and exhaust systems shall be formed either by—

(1) Flanged metal to metal joints meeting the requirements of paragraph (q) of this section; or

(2) Metal flanges fitted with metal gaskets and meeting the following requirements:

(i) Flat surfaces between bolt holes that form any part of a flame-arresting path shall be planed to within a maximum deviation of one-half the maximum clearance specified in paragraph (q)(7) of this section. All metal surfaces forming a flame-arresting path shall be finished during the manufacturing process to not more than 250 microinches.

(ii) A means shall be provided to ensure that fastenings maintain the tightness of joints. The means provided shall not lose its effectiveness through repeated assembly and disassembly.

(iii) Fastenings shall be as uniform in size as practicable to preclude improper assembly.

(iv) Holes for fastenings shall not penetrate to the interior of an intake or exhaust system and shall be threaded to ensure that all specified bolts or screws will not bottom even if the washers are omitted.

(v) Fastenings used for joints of flame-arresting paths on intake or exhaust systems shall be used only for attaching parts that are essential in maintaining the explosion-proof integrity. They shall not be used for attaching brackets or other parts.

(vi) The minimum thickness of material for flanges shall be ½-inch, except that a final thickness of 7⁄16-inch is allowed after machining rolled plate.

(vii) The maximum fastening spacing shall be 6 inches.

(viii) The minimum diameter of fastenings shall be ⅜-inch, except smaller diameter fastenings may be used if the joint first meets the requirements of the static pressure test in § 7.104, and the explosion test in § 7.100.

(ix) The minimum thread engagement of fastenings shall be equal to or greater than the nominal diameter of the fastenings specified, or the intake or exhaust system must meet the test requirements of the explosion tests in § 7.100 and the static pressure test in § 7.104.

(x) The minimum contact surface of gaskets forming flame-arresting paths shall be ⅜-inch, and the thickness of the gaskets shall be no greater than 1⁄16-inch. The minimum distance from the interior edge of a gasket to the edge of a fastening hole shall be ⅜-inch. The gaskets shall be positively positioned, and a means shall be provided to preclude improper installation. When the joint is completely assembled, it shall be impossible to insert a 0.0015-inch thickness gauge to a depth exceeding ⅛-inch between the gasket and mating flanges. Other gasket designs shall be evaluated in accordance with § 7.107.

(q) The following construction requirements shall apply to flame-arresting paths formed without gaskets:

(1) Flat surfaces between fastening holes that form any part of a flame-arresting path shall be planed to within a maximum deviation of one-half the maximum clearance specified in paragraph (q)(7) of this section. All metal surfaces forming a flame-arresting path shall be finished during the manufacturing process to not more than 250 microinches. A thin film of nonhardening preparation to inhibit rusting may be applied to these finished metal surfaces, as long as the final surface can be readily wiped free of any foreign materials.

(2) A means shall be provided to ensure that fastenings maintain the tightness of joints. The means provided shall not lose its effectiveness through repeated assembly and disassembly.

(3) Fastenings shall be as uniform in size as practicable to preclude improper assembly.

(4) Holes for fastenings shall not penetrate to the interior of an intake or exhaust system and shall be threaded to ensure that all specified bolts or screws will not bottom even if the washers are omitted.

(5) Fastenings used for joints of flame-arresting paths on intake or exhaust systems shall be used only for attaching parts that are essential in maintaining the explosion-proof integrity. They shall not be used for attaching brackets or other parts.

(6) The flame-arresting path of threaded joints shall conform to the requirements of paragraph (q)(7) of this section.

(7) Intake and exhaust systems joints shall meet the specifications set out in Table F–1.

TABLE F–1.—DIMENSIONAL REQUIREMENTS FOR EXPLOSION-PROOF INTAKE AND EXHAUST SYSTEM JOINTS

Minimum thickness of material for flanges	½″ [1]
Minimum width of joint; all in one plane	1″
Maximum clearance; joint all in one plane	0.004″
Minimum width of joint, portions of which are different planes; cylinders or equivalent	¾″ [2]
Maximum clearances; joint in two or more planes, cylinders or equivalent:	
Portion perpendicular to plane	0.008″ [3]
Plane portion	0.006″
Maximum fastening [4] spacing; joints all in one plane [5]	6″
Maximum fastening spacing; joints, portions of which are in different planes	8″

TABLE F–1.—DIMENSIONAL REQUIREMENTS FOR EXPLOSION-PROOF INTAKE AND EXHAUST SYSTEM JOINTS—Continued

Minimum diameter of fastening (without regard to type of joint) [6]	3/8″
Minimum thread engagement of fastening [7]	1/16″
Maximum diametrical clearance between fastening body and unthreaded holes through which it passes [8 9 10].	
Minimum distance from interior of the intake or exhaust system to the edge of a fastening hole: [11]	
Joint-minimum width 1″	7/16″ [8 12]
Shafts centered by ball or roller bearings:	
Minimum length of flame-arresting path	1″
Maximum diametrical clearance	0.030″
Other cylindrical joints:	
Minimum length of flame-arresting path	1″
Maximum diametrical clearance	0.010″

[1] 1/16-inch less is allowable for machining rolled plate.
[2] If only two planes are involved, neither portion of a joint shall be less than 1/8-inch wide, unless the wider portion conforms to the same requirements as those for a joint that is all in one plane. If more than two planes are involved (as in labyrinths or tongue-in-groove joints), the combined lengths of those portions having prescribed clearances are considered.
[3] The allowable diametrical clearance is 0.008-inch when the portion perpendicular to the plane portion is 1/4-inch or greater in length. If the perpendicular portion is more than 1/8-inch but less than 1/4-inch wide, the diametrical clearance shall not exceed 0.006-inch.
[4] Studs, when provided, shall bottom in blind holes, be completely welded in place, or have the bottom of the hole closed with a plug secured by weld or braze. Fastenings shall be provided at all corners.
[5] The requirements as to diametrical clearance around the fastening and minimum distance from the fastening hole to the inside of the intake or exhaust system apply to steel dowel pins. In addition, when such pins are used, the spacing between centers of the fastenings on either side of the pin shall not exceed 5 inches.
[6] Fastening diameters smaller than specified may be used if the joint or assembly meets the test requirements of § 7.104.
[7] Minimum thread engagement shall be equal to or greater than the nominal diameter of the fastening specified, or the intake or exhaust system must meet the test requirements of § 7.104.
[8] The requirements as to diametrical clearance around the fastening and minimum distance from the fastening hole to the inside of the intake or exhaust system apply to steel dowel pins. In addition, when such pins are used, the spacing between centers of the fastenings on either side of the pin shall not exceed 5 inches.
[9] This maximum clearance only applies when the fastening is located within the flame-arresting path.
[10] Threaded holes for fastenings shall be machined to remove burrs or projections that affect planarity of a surface forming a flame-arresting path.
[11] Edge of the fastening hole shall include any edge of any machining done to the fastening hole, such as chamfering.
[12] f the diametrical clearance for fastenings does not exceed 1/32-inch, then the minimum distance shall be 1/4-inch.

(r) *Intake system*. (1) The intake system shall include a device between the air cleaner and intake flame arrester, operable from the equipment operator's compartment, to shut off the air supply to the engine for emergency purposes. Upon activation, the device must operate immediately and the engine shall stop within 15 seconds.

(2) The intake system shall include a flame arrester that will prevent an explosion within the system from propagating to a surrounding flammable mixture when tested in accordance with the explosion tests in § 7.100. The flame arrester shall be located between the air cleaner and the intake manifold and shall be attached so that it can be removed for inspection or cleaning. The flame arrester shall be constructed of corrosion-resistant metal and meet the following requirements:

(i) Two intake flame arrester designs, the spaced-plate type and the crimped ribbon type, will be tested in accordance with the requirements of § 7.100. Variations to these designs or other intake flame arrester designs will be evaluated under the provisions of § 7.107.

(ii) In flame arresters of the spaced-plate type, the thickness of the plates shall be at least 0.125-inch; spacing between the plates shall not exceed 0.018-inch; and the flame-arresting path formed by the plates shall be at least 1 inch wide. The unsupported length of the plates shall be short enough that permanent deformation resulting from explosion tests shall not exceed 0.002-inch. The plates and flame arrester housing shall be an integral unit which cannot be disassembled.

(iii) In flame arresters of the crimped ribbon type, the dimensions of the core openings shall be such that a plug gauge 0.018-inch in diameter shall not pass through, and the flame-arresting path core thickness shall be at least 1 inch. The core and flame arrester housing shall be an integral unit which cannot be disassembled.

(3) The intake system shall be designed so that improper installation of the flame arrester is impossible.

(4) The intake system shall include an air cleaner service indicator. The air cleaner shall be installed so that only filtered air will enter the flame arrester. The air cleaner shall be sized and the service indicator set in accordance with the engine manufacturer's recommendations. Unless the service indicator is explosion-proof, it shall be located between the air cleaner and flame arrester, and the service indicator setting shall be reduced to account for the additional restriction imposed by the flame arrester.

(5) The intake system shall include a connection between the intake flame arrester and the engine head for temporary attachment of a device to indicate the total vacuum in the system. This opening shall be closed by a plug or other suitable device that is sealed or locked in place except when in use.

(s) *Exhaust system*. (1) The exhaust system shall include a flame arrester that will prevent propagation of flame or discharge of glowing particles to a surrounding flammable mixture. The flame arrester shall be constructed of corrosion-resistant metal.

(i) If a mechanical flame arrester is used, it shall be positioned so that only cooled exhaust gas at a maximum temperature of 302° F (150° C) will be discharged through it.

(ii) If a mechanical flame arrester of the spaced-plate type is used, it must meet the requirements of paragraph (r)(2)(ii) of this section and the test requirements of § 7.100. Variations to the spaced-plate flame arrester design and other mechanical flame arrester designs shall be evaluated under the provisions of § 7.107. The flame arrester shall be designed and attached so that it can be removed for inspection and cleaning.

(2) The exhaust system shall allow a wet exhaust conditioner to be used as the exhaust flame arrester provided that

the explosion tests of § 7.100 demonstrate that the wet exhaust conditioner will arrest flame. When used as a flame arrester, the wet exhaust conditioner shall be equipped with a sensor to automatically activate the safety shutdown system at or above the minimum allowable low water level established by § 7.100. Restarting of the engine shall be prevented until the water supply in the wet exhaust conditioner has been replenished above the minimum allowable low water level. All parts of the wet exhaust conditioner and associated components that come in contact with contaminated exhaust conditioner water shall be constructed of corrosion-resistant material. The wet exhaust conditioner shall include a means for verifying that the safety shutdown system operates at the proper water level. A means shall be provided for draining and cleaning the wet exhaust conditioner. The final exhaust gas temperature at discharge from the wet exhaust conditioner shall not exceed 170° F (76° C) under test conditions specified in § 7.102. A sensor shall be provided that activates the safety shutdown system before the exhaust gas temperature at discharge from the wet exhaust conditioner exceeds 185° F (85° C) under test conditions specified in § 7.103(a)(4).

(3) The exhaust system shall be designed so that improper installation of the flame arrester is impossible.

(4) The exhaust system shall provide a means to cool the exhaust gas and prevent discharge of glowing particles.

(i) When a wet exhaust conditioner is used to cool the exhaust gas and prevent the discharge of glowing particles, the temperature of the exhaust gas at the discharge from the exhaust conditioner shall not exceed 170° F (76° C) when tested in accordance with the exhaust gas cooling efficiency test in § 7.102. A sensor shall be provided that activates the safety shutdown system before the exhaust gas temperature at discharge from the wet exhaust conditioner exceeds 185° F (85° C) when tested in accordance with the safety system controls test in § 7.103. All parts of the wet exhaust conditioner and associated components that come in contact with contaminated exhaust conditioner water shall be constructed of corrosion-resistant material.

(ii) When a dry exhaust conditioner is used to cool the exhaust gas, the temperature of the exhaust gas at discharge from the diesel power package shall not exceed 302° F (150° C) when tested in accordance with the exhaust gas cooling efficiency test of § 7.102. A sensor shall be provided that activates the safety shutdown system before the exhaust gas exceeds 302° F (150° C) when tested in accordance with the safety system control test in § 7.103. A means shall be provided to prevent the discharge of glowing particles, and it shall be evaluated under the provisions of § 7.107.

(5) Other means for cooling the exhaust gas and preventing the propagation of flame or discharge of glowing particles shall be evaluated under the provisions of § 7.107.

(6) There shall be a connection in the exhaust system for temporary attachment of a device to indicate the total backpressure in the system and collection of exhaust gas samples. This opening shall be closed by a plug or other suitable device that is sealed or locked in place except when in use.

§ 7.99 Critical characteristics.

The following critical characteristics shall be inspected or tested on each diesel power package to which an approval marking is affixed:

(a) Finish, width, planarity, and clearances of surfaces that form any part of a flame-arresting path.

(b) Thickness of walls and flanges that are essential in maintaining the explosion-proof integrity of the diesel power package.

(c) Size, spacing, and tightness of fastenings.

(d) The means provided to maintain tightness of fastenings.

(e) Length of thread engagement on fastenings and threaded parts that ensure the explosion-proof integrity of the diesel power package.

(f) Diesel engine approval marking.

(g) Fuel rate setting to ensure that it is appropriate for the intended application, or a warning tag shall be affixed to the fuel system notifying the purchaser of the need to make proper adjustments.

(h) Material and dimensions of gaskets that are essential in maintaining the explosion-proof integrity of the diesel power package.

(i) Dimensions and assembly of flame arresters.

(j) Materials of construction to ensure that the intake system, exhaust system, cooling fans, and belts have been fabricated from the required material.

(k) Proper interconnection of the coolant system components and use of specified components.

(l) Proper interconnection of the safety shutdown system components and use of specified components.

(m) All plugs and covers to ensure that they are tightly installed.

(n) The inspections and tests described in the diesel power package checklist shall be performed and all requirements shall be met.

§ 7.100 Explosion tests.

(a) *Test procedures.* (1) Prepare to test the diesel power package as follows:

(i) Perform a detailed check of parts against the drawings and specifications submitted under § 7.97 to determine that the parts and drawings agree.

(ii) Remove all parts that do not contribute to the operation or ensure the explosion-proof integrity of the diesel power package such as the air cleaner and exhaust gas dilution system.

(iii) Fill coolant system fluid and engine oil to the engine manufacturer's recommended levels.

(iv) Interrupt fuel supply to the injector pump.

(v) Establish a preliminary low water level for systems using the wet exhaust conditioner as a flame arrester.

(2) Perform static and dynamic tests of the intake system as follows:

(i) Install the diesel power package in an explosion test chamber which is large enough to contain the complete diesel power package. The chamber must be sufficiently darkened and provide viewing capabilities of the flame-arresting paths to allow observation during testing of any discharge of flame or ignition of the flammable mixture surrounding the diesel power package. Couple the diesel power package to an auxiliary drive mechanism. Attach a pressure measuring device, a temperature measuring device, and an ignition source to the intake system. The pressure measuring device shall be capable of indicating the peak pressure accurate to ±1 pound-per-square inch gauge (psig) at 100 psig static pressure and shall have a frequency response of 40 Hertz or greater. The ignition source shall be an electric spark with a minimum energy of 100 millijoules. The ignition source shall be located immediately adjacent to the intake manifold and the pressure and temperature devices shall be located immediately adjacent to the flame arrester.

(ii) For systems using the wet exhaust conditioner as an exhaust flame arrester, fill the exhaust conditioner to the specified high or normal operating water level.

(iii) Fill the test chamber with a mixture of natural gas and air or methane and air. If natural gas is used, the content of combustible hydrocarbons shall total at least 98.0 percent, by volume, with the remainder being inert. At least 80.0 percent, by volume, of the gas shall be methane. For all tests, the methane or natural gas concentration shall be 8.5 ± 1.8 percent, by volume, and the oxygen

concentration shall be no less than 18 percent, by volume.

(iv) Using the auxiliary drive mechanism, motor the engine to fill the intake and exhaust systems with the flammable mixture. The intake system, exhaust system, and test chamber gas concentration shall not differ by more than ±0.3 percent, by volume, at the time of ignition.

(v) For static tests, stop the engine, actuate the ignition source, and observe the peak pressure. The peak pressure shall not exceed 110 psig. If the peak pressure exceeds 110 psig, construction changes shall be made that result in a reduction of pressure to 110 psig or less, or the system shall be tested in accordance with the static pressure test of § 7.104 with the pressure parameter replaced with a static pressure of twice the highest value recorded.

(vi) If the peak pressure does not exceed 110 psig or if the system meets the static pressure test requirements of this section and there is no discharge of visible flames or glowing particles or ignition of the flammable mixture in the chamber, a total of 20 tests shall be conducted in accordance with the explosion test specified above.

(vii) For dynamic tests, follow the same procedures for static tests, except actuate the ignition source while motoring the engine. Forty dynamic tests shall be conducted at two speeds, twenty at 1800 ± 200 RPM and twenty at 1000 ± 200 RPM. Under some circumstances, during dynamic testing the flammable mixture may continue to burn within the diesel power package after ignition. This condition can be recognized by the presence of a rumbling noise and a rapid increase in temperature. This can cause the flame-arrester to reach temperatures which can ignite the surrounding flammable mixture. Ignition of the flammable mixture in the test chamber under these circumstances does not constitute failure of the flame arrester. However; if this condition is observed, the test operator should immediately stop the engine and allow components to cool to prevent damage to the components.

(3) Perform static and dynamic tests of the exhaust system as follows:

(i) Prepare the diesel power package for explosion tests according to § 7.100(a)(2)(i) as follows:

(A) Install the ignition source immediately adjacent to the exhaust manifold.

(B) Install pressure measuring devices in each segment as follows: immediately adjacent to the exhaust conditioner inlet; in the exhaust conditioner; and immediately adjacent to the flame arrester, if applicable.

(C) Install a temperature device immediately adjacent to the exhaust conditioner inlet.

(ii) If the exhaust system is provided with a spaced-plate flame arrester in addition to an exhaust conditioner, explosion tests of the exhaust system shall be performed as described for the intake system in accordance with this section. Water shall not be present in a wet exhaust conditioner for the tests.

(iii) If the wet exhaust conditioner is used as the exhaust flame arrester, explosion testing of this type of system shall be performed as described for the intake system in accordance with this section with the following modifications:

(A) Twenty static tests, twenty dynamic tests at 1800 ± 200 RPM, and twenty dynamic tests at 1000 ± 200 RPM shall be conducted at 2 inches below the minimum allowable low water level. All entrances in the wet exhaust conditioner which do not form explosion-proof joints shall be opened. These openings may include lines which connect the reserve water supply to the wet exhaust conditioner, insert flanges, float flanges, and cover plates. These entrances are opened during this test to verify that they are not flame paths.

(B) Twenty static tests, twenty dynamic tests at 1800± 200 RPM rated speed, and twenty dynamic tests at 1000 ± 200 RPM shall be conducted at 2 inches below the minimum allowable low water level. All entrances in the wet exhaust conditioner (except the exhaust conditioner outlet) which do not form explosion-proof joints shall be closed. These openings are closed to simulate normal operation.

(C) Twenty static tests, twenty dynamic tests at 1800 ± 200 RPM rated speed, and twenty dynamic tests at 1000 ± 200 RPM shall be conducted at the specified high or normal operating water level. All entrances in the wet exhaust conditioner which do not form explosion-proof joints shall be opened.

(D) Twenty static tests, twenty dynamic tests at 1800 ± 200 RPM, and twenty dynamic tests at 1000 ± 200 RPM shall be conducted at the specified high or normal operating water level. All entrances in the wet exhaust conditioner (except the exhaust conditioner outlet) which do not form explosion-proof joints shall be closed.

(iv) After successful completion of the explosion tests of the exhaust system, the minimum allowable low water level, for a wet exhaust conditioner used as the exhaust flame arrester, shall be determined by adding two inches to the lowest water level that passed the explosion tests.

(v) A determination shall be made of the maximum grade on which the wet exhaust conditioner can be operated retaining the flame-arresting characteristics.

(b) *Acceptable performance.* The explosion tests shall not result in any of the following—

(1) Discharge of flame or glowing particles.

(2) Visible discharge of gas through gasketed joints.

(3) Ignition of the flammable mixture in the test chamber.

(4) Rupture of any part that affects the explosion-proof integrity.

(5) Clearances, in excess of those specified in this subpart, along accessible flame-arresting paths, following any necessary retightening of fastenings.

(6) Pressure exceeding 110 psig, unless the intake system or exhaust system has withstood a static pressure of twice the highest value recorded in the explosion tests of this section following the static pressure test procedures of § 7.104.

(7) Permanent distortion of any planar surface of the diesel power package exceeding 0.04-inches/linear foot.

(8) Permanent deformation exceeding 0.002-inch between the plates of spaced-plate flame arrester designs.

§ 7.101 Surface temperature tests.

The test for determination of exhaust gas cooling efficiency described in § 7.102 may be done simultaneously with this test.

(a) *Test procedures.* (1) Prepare to test the diesel power package as follows:

(i) Perform a detailed check of parts against the drawings and specifications submitted to MSHA under compliance with § 7.97 to determine that the parts and drawings agree.

(ii) Fill the coolant system with a mixture of equal parts of antifreeze and water, following the procedures specified in the application, § 7.97(a)(3).

(iii) If a wet exhaust conditioner is used to cool the exhaust gas, fill the exhaust conditioner to the high or normal operating water level and have a reserve water supply available, if applicable.

(2) Tests shall be conducted as follows:

(i) The engine shall be set to the rated horsepower specified in § 7.97(a)(2).

(ii) Install sufficient temperature measuring devices to determine the location of the highest coolant temperature. The temperature measuring devices shall be accurate to ±4 °F (±2 °C).

(iii) Operate the engine at rated horsepower and with 0.5±0.1 percent,

by volume, of methane in the intake air mixture until all parts of the engine, exhaust coolant system, and other components reach their respective equilibrium temperatures. The liquid fuel temperature into the engine shall be maintained at 100 °F (38 °C) ±10 °F (6 °C) and the intake air temperature shall be maintained at 70 °F (21 °C) ±5 °F (3 °C).

(iv) Increase the coolant system temperatures until the highest coolant temperature is 205 °F to 212 °F (96 °C to 100 °C), or to the maximum temperature specified by the applicant, if lower.

(v) After all coolant system temperatures stabilize, operate the engine for 1 hour.

(vi) The ambient temperature shall be between 50 °F (10 °C) and 104 °F (40 °C) throughout the tests.

(b) *Acceptable performance.* The surface temperature of any external surface of the diesel power package shall not exceed 302 °F (150 °C) during the test.

§ 7.102 Exhaust gas cooling efficiency test.

(a) *Test procedures.* (1) Follow the procedures specified in § 7.101(a).

(2) Install a temperature measuring device to measure the exhaust gas temperature at discharge from the exhaust conditioner. The temperature measuring device shall be accurate to ±4 °F (±2 °C).

(3) Determine the exhaust gas temperature at discharge from the exhaust conditioner before the exhaust gas is diluted with air.

(b) *Acceptable performance.*

(1) The exhaust gas temperature at discharge from a wet exhaust conditioner before the exhaust gas is diluted with air shall not exceed 170 °F (76 °C).

(2) The exhaust gas temperature at discharge from a dry exhaust conditioner before the gas is diluted with air shall not exceed 302 °F (150 °C).

§ 7.103 Safety system control test.

(a) *Test procedures.* (1) Prior to testing, perform the tasks specified in § 7.101(a)(1) and install sufficient temperature measuring devices to measure the highest coolant temperature and exhaust gas temperature at discharge from the exhaust conditioner. The temperature measuring devices shall be accurate to ±4 °F (±2 °C).

(2) Determine the effectiveness of the coolant system temperature shutdown sensors which will automatically activate the safety shutdown system and stop the engine before the coolant temperature in the cooling jackets exceeds manufacturer's specifications or 212 °F (100 °C), whichever is lower, by operating the engine and causing the coolant in the cooling jackets to exceed the specified temperature.

(3) For systems using a dry exhaust gas conditioner, determine the effectiveness of the temperature sensor in the exhaust gas stream which will automatically activate the safety shutdown system and stop the engine before the cooled exhaust gas temperature exceeds 302 °F (150 °C), by operating the engine and causing the cooled exhaust gas to exceed the specified temperature.

(4) For systems using a wet exhaust conditioner, determine the effectiveness of the temperature sensor in the exhaust gas stream which will automatically activate the safety shutdown system and stop the engine before the cooled exhaust gas temperature exceeds 185 °F (85 °C), with the engine operating at a high idle speed condition. Temporarily disable the reserve water supply, if applicable, and any safety shutdown system control that might interfere with the evaluation of the operation of the exhaust gas temperature sensor. Prior to testing, set the water level in the wet exhaust conditioner to a level just above the minimum allowable low water level. Run the engine until the exhaust gas temperature sensor activates the safety shutdown system and stops the engine.

(5) For systems using a wet exhaust conditioner as an exhaust flame arrester, determine the effectiveness of the low water sensor which will automatically activate the safety shutdown system and stop the engine at or above the minimum allowable low water level established from results of the explosion tests in § 7.100 with the engine operating at a high idle speed condition. Temporarily disable the reserve water supply, if applicable, and any safety shutdown system control that might interfere with the evaluation of the operation of the low water sensor. Prior to testing, set the water level in the wet exhaust conditioner to a level just above the minimum allowable low water level. Run the engine until the low water sensor activates the safety shutdown system and stops the engine. Measure the low water level. Attempt to restart the engine.

(6) Determine the effectiveness of the device in the intake system which is designed to shut off the air supply and stop the engine for emergency purposes with the engine operating at both a high idle speed condition and a low idle speed condition. Run the engine and activate the emergency intake air shutoff device.

(7) Determine the total air inlet restriction of the complete intake system, including the air cleaner, as measured between the intake flame arrester and the engine head with the engine operating at maximum air flow.

(8) Determine the total exhaust backpressure with the engine operating at rated horsepower as specified in § 7.103(a)(7). If a wet exhaust conditioner is used, it must be filled to the high or normal operating water level during this test.

(9) The starting mechanism shall be tested to ensure that engagement is not possible while the engine is running. Operate the engine and attempt to engage the starting mechanism.

(10) Where the lack of engine oil pressure must be overridden in order to start the engine, test the override to ensure that it does not override any of the safety shutdown sensors specified in § 7.98(i). After each safety shutdown sensor test specified in paragraphs (a)(2) through (a)(5) of this section, immediately override the engine oil pressure and attempt to restart the engine.

(b) *Acceptable performance.* Tests of the safety system controls shall result in the following:

(1) The coolant system temperature shutdown sensor shall automatically activate the safety shutdown system and stop the engine before the water temperature in the cooling jackets exceeds manufacturer's specifications or 212 °F (100 °C), whichever is lower.

(2) The temperature sensor in the exhaust gas stream of a system using a dry exhaust conditioner shall automatically activate the safety shutdown system and stop the engine before the cooled exhaust gas exceeds 302 °F (150 °C).

(3) The temperature sensor in the exhaust gas stream of a system using a wet exhaust conditioner shall automatically activate the safety shutdown system and stop the engine before the cooled exhaust gas exceeds 185 °F (85 °C).

(4) The low water sensor for systems using a wet exhaust conditioner shall automatically activate the safety shutdown system and stop the engine at or above the minimum allowable low water level and prevent restarting of the engine.

(5) The emergency intake air shutoff device shall operate immediately when activated and stop the engine within 15 seconds.

(6) The total intake air inlet restriction and the total exhaust backpressure shall not exceed the engine manufacturer's specifications.

(7) It shall not be possible to engage the starting mechanism while the engine is running, unless the starting mechanism is constructed of nonsparking material.

(8) The engine oil pressure override shall not override any of the shutdown sensors.

§ 7.104 Internal static pressure test.

(a) *Test procedures.* (1) Isolate and seal each segment of the intake system or exhaust system to allow pressurization.

(2) Internally pressurize each segment of the intake system or exhaust system to four times the maximum pressure observed in each segment during the tests of § 7.100, or 150 psig ± 5 psig, whichever is less. Maintain the pressure for a minimum of 10 seconds.

(3) Following the pressure hold, the pressure shall be removed and the pressurizing agent removed from the intake system or exhaust system.

(b) *Acceptable performance.* (1) The intake system or exhaust system, during pressurization, shall not exhibit—

(i) Leakage through welds and gasketed joints; or

(ii) Leakage other than along joints meeting the explosion-proof requirements of § 7.98(q).

(2) Following removal of the pressurizing agent, the intake system or exhaust system shall not exhibit any—

(i) Changes in fastening torque;

(ii) Visible cracks in welds;

(iii) Permanent deformation affecting the length or gap of any flame-arresting paths;

(iv) Stretched or bent fastenings;

(v) Damaged threads of parts affecting the explosion-proof integrity of the intake system or exhaust system; or

(vi) Permanent distortion of any planar surface of the diesel power package exceeding 0.04-inches/linear foot.

§ 7.105 Approval marking.

Each approved diesel power package shall be identified by a legible and permanent approval plate inscribed with the assigned MSHA approval number and securely attached to the diesel power package in a manner that does not impair any explosion-proof characteristics. The grade limitation of a wet exhaust conditioner used as an exhaust flame arrester shall be included on the approval marking.

§ 7.106 Post-approval product audit.

Upon request by MSHA, but not more than once a year except for cause, the approval-holder shall make an approved diesel power package available for audit at no cost to MSHA.

§ 7.107 New technology.

MSHA may approve a diesel power package that incorporates technology for which the requirements of this subpart are not applicable if MSHA determines that the diesel power package is as safe as those which meet the requirements of this subpart.

§ 7.108 Power package checklist.

Each diesel power package bearing an MSHA approval plate shall be accompanied by a power package checklist. The power package checklist shall consist of a list of specific features that must be checked and tests that must be performed to determine if a previously approved diesel power package is in approved condition. Test procedures shall be specified in sufficient detail to allow evaluation to be made without reference to other documents. Illustrations shall be used to fully identify the approved configuration of the diesel power package.

PARTS 31—DIESEL MINE LOCOMOTIVES [REMOVED]

3. Part 31 is removed.

PART 32—MOBILE DIESEL-POWERED EQUIPMENT FOR NONCOAL MINES [REMOVED]

4. Part 32 is removed.

PART 36—[AMENDED]

5. The authority for part 36 continues as follows:

Authority: 30 U.S.C. 957, 961.

6. The heading of part 36 is revised to read as follows:

PART 36—APPROVAL REQUIREMENTS FOR PERMISSIBLE MOBILE DIESEL-POWERED TRANSPORTATION EQUIPMENT.

7. Section 36.1 is revised to read as follows:

§ 36.1 Purpose.

The regulations in this part set forth the requirements for mobile diesel-powered transportation equipment to procure their approval and certification as permissible; procedures for applying for such certification; and fees.

8. Section 36.2 is revised to read as follows:

§ 36.2 Definitions.

The following definitions apply in this part.

Applicant An individual, partnership, company, corporation, association, or other organization, that designs, manufactures, assembles, or controls the assembly and that seeks a certificate of approval or preliminary testing of mobile diesel-powered transportation equipment as permissible.

Certificate of approval. A formal document issued by MSHA stating that the complete assembly has met the requirements of this part for mobile diesel-powered transportation equipment and authorizing the use and attachment of an official approval plate so indicating.

Component. A piece, part, or fixture of mobile diesel-powered transportation equipment that is essential to its operation as a permissible assembly.

Diesel engine. A compression-ignition, internal-combustion engine that utilizes diesel fuel.

Explosion proof. A component or subassembly that is so constructed and protected by an enclosure and/or flame arrester (s) that if a flammable mixture of gas is ignited within the enclosure it will withstand the resultant pressure without damage to the enclosure and/or flame arrester(s). Also the enclosure and/or flame arrester(s) shall prevent the discharge of flame or ignition of any flammable mixture that surrounds the enclosure.

Flame arrester. A device so constructed that flame or sparks from the diesel engine cannot propagate an explosion of a flammable mixture through it.

Flammable mixture. A mixture of gas, such as methane, natural gas, or similar hydrocarbon gas with normal air, that will propagate flame or explode violently when initiated by an incendive source.

Fuel-air ratio. The composition of the mixture of fuel and air in the combustion chamber of the diesel engine expressed as weight-pound of fuel per pound of air.

MSHA. The United States Department of Labor, Mine Safety and Health Administration.

Mobile diesel-powered transportation equipment. Equipment that is:

(1) Used for transporting the product being mined or excavated, or for transporting materials and supplies used in mining or excavating operations;

(2) Mounted on wheels or crawler treads (tracks); and

(3) Powered by a diesel engine as the prime mover.

Normal operation. When each component and the entire assembly of the mobile diesel-powered transportation equipment performs the functions for which they were designed.

Permissible. As applied to mobile diesel-powered transportation equipment, this means that the

complete assembly conforms to the requirements of this part, and that a certificate of approval to that effect has been issued.

Subassembly. A group or combination of components.

9. Section 36.6, paragraphs (b)(2), (b)(3), and (b)(4) are amended by inserting the phrase ''Except for equipment utilizing part 7, subpart F power packages,'' at the beginning of the first sentence of each paragraph.

10. Section 36.9 is amended by revising the third sentence of paragraph (a) to read as follows:

§ 36.9 Conduct of investigations, tests, and demonstrations.

(a) * * * After the issuance of a certificate of approval, MSHA may conduct such public demonstrations and tests of the approved mobile diesel-powered transportation equipment as it deems appropriate. * * *

* * * * *

11. Section 36.20, paragraphs (b) is revised and paragraph (c) is added to read as follows:

§ 36.20 Quality of material, workmanship, and design.

* * * * *

(b) The quality of material, workmanship, and design shall conform to the requirements of § 7.98(q) of this chapter.

(c) Power packages approved under part 7, subpart F of this chapter are considered to be acceptable for use in equipment submitted for approval under this part. Sections 36.21 through 36.26 (except § 36.25(f)) and §§ 36.43 through 36.48 are not applicable to equipment utilizing part 7, subpart F power packages, since these requirements have already been satisfied.

12. Section 36.21 is amended by revising the first sentence to read as follows:

§ 36.21 Engine for equipment considered for certification.

Only equipment powered by a compression-ignition (diesel) engine and burning diesel fuel will be considered for approval and certification. ***

13. Section 36.43 is amended by removing the phrase ''in underground gassy noncoal mines and tunnels'' from the last sentence of paragraph (a).

14. The note of § 36.48 is revised to read as follows:

§ 36.48 Tests of surface temperature of engine and components of the cooling system.

* * * * *

Note to § 36.48: The engine may be operated under test conditions prescribed by MSHA while completely surrounded by a flammable mixture. MSHA reserves the right to apply combustible materials to any surface for test. Operation under such conditions shall not ignite the flammable mixture.

PART 70—[AMENDED]

15. The authority citation for part 70 continues to read as follows:

Authority: 30 U.S.C. 811, 813(h), 957, and 961.

16. Subparts G–S are reserved and a new subpart T is added to part 70 to read as follows:

* * * * *

Subpart T—Diesel Exhaust Gas Monitoring

Sec.
70.1900 Exhaust Gas Monitoring

SUBPART T—DIESEL EXHAUST GAS MONITORING

§ 70.1900 Exhaust Gas Monitoring.

(a) During on-shift examinations required by § 75.362, a certified person as defined by § 75.100 of this chapter and designated by the operator as trained or experienced in the appropriate sampling procedures, shall determine the concentration of carbon monoxide (CO) and nitrogen dioxide (NO_2):

(1) In the return of each working section where diesel equipment is used, at a location which represents the contribution of all diesel equipment on such section;

(2) In the area of the section loading point if diesel haulage equipment is operated on the working section;

(3) At a point inby the last piece of diesel equipment on the longwall or shortwall face when mining equipment is being installed or removed; and

(4) In any other area designated by the district manager as specified in the mine operator's approved ventilation plan where diesel equipment is operated in a manner which can result in significant concentrations of diesel exhaust.

(b) Samples of CO and NO_2 shall be—

(1) Collected in a manner that makes the results available immediately to the person collecting the samples;

(2) Collected and analyzed by appropriate instrumentation which has been maintained and calibrated in accordance with the manufacturer's recommendations; and

(3) Collected during periods that are representative of conditions during normal operations.

(c) Except as provided in § 75.325(j) of this chapter, when sampling results indicate a concentration of CO and/or NO_2 exceeding an action level of 50 percent of the threshold limit values (TLV®) adopted by the American Conference of Governmental Industrial Hygienists, the mine operator shall immediately take appropriate corrective action to reduce the concentrations of CO and/or NO_2 to below the applicable action level. The publication, ''Threshold Limit Values for Substance in Workroom Air'' (1972) is incorporated by reference and may be inspected at MSHA's Office of Standards, Regulations, and Variances, 4015 Wilson Boulevard, Arlington, VA 22203; at any Coal Mine Health and Safety District and Subdistrict Office; and at the Office of the Federal Register, 800 North Capitol Street, NW Suite 700, Washington, DC. This incorporation by reference was approved by the Director of the Federal Register in accordance with 5 U.S.C. 552(a) and 1 CFR part 51. In addition, copies of the document may be purchased from the Secretary-Treasurer, American Conference of Governmental Industrial Hygienists, Post Office Box 1937, Cincinnati, OH 45202.

(d) A record shall be made when sampling results exceed the action level for the applicable TLV® for CO and/or NO_2. The record shall be made as part of and in the same manner as the records for hazards required by § 75.363 of this chapter and include the following:

(1) Location where each sample was collected;

(2) Substance sampled and the measured concentration; and

(3) Corrective action taken to reduce the concentration of CO and/or NO_2 to or below the applicable action level.

(e) As of November 25, 1997 exhaust gas monitoring shall be conducted in accordance with the requirements of this section.

PART 75—[AMENDED]

17. The authority citation for part 75 continues to read as follows:

Authority: 30 U.S.C. 811.

18. New paragraphs (f) through (k) are added to § 75.325 to read as follows:

§ 75.325 Air quantity.

* * * * *

(f) The minimum ventilating air quantity for an individual unit of diesel-powered equipment being operated shall be at least that specified on the approval plate for that equipment. Such air quantity shall be maintained—

(1) In any working place where the equipment is being operated;

(2) At the section loading point during any shift the equipment is being operated on the working section;

(3) In any entry where the equipment is being operated outby the section loading point in areas of the mine developed on or after April 25, 1997;

(4) In any air course with single or multiple entries where the equipment is being operated outby the section loading point in areas of the mine developed prior to April 25, 1997; and

(5) At any other location required by the district manager and specified in the approved ventilation plan.

(g) The minimum ventilating air quantity where multiple units of diesel-powered equipment are operated on working sections and in areas where mechanized mining equipment is being installed or removed must be at least the sum of that specified on the approval plates of all the diesel-powered equipment on the working section or in the area where mechanized mining equipment is being installed or removed. The minimum ventilating air quantity shall be specified in the approved ventilation plan. For working sections such air quantity must be maintained—

(1) In the last open crosscut of each set of entries or rooms in each working section;

(2) In the intake, reaching the working face of each longwall; and

(3) At the intake end of any pillar line.

(h) The following equipment may be excluded from the calculations of ventilating air quantity under paragraph (g) if such equipment exclusion is approved by the district manager and specified in the ventilation plan:

(1) Self-propelled equipment meeting the requirements of § 75.1908(b);

(2) Equipment that discharges its exhaust into intake air that is coursed directly to a return air course;

(3) Equipment that discharges its exhaust directly into a return air course; and

(4) Other equipment having duty cycles such that the emissions would not significantly affect the exposure of miners.

(i) A ventilating air quantity that is less than what is required by paragraph (g) of this section may be approved by the district manager in the ventilation plan based upon the results of sampling that demonstrate that the lesser air quantity will maintain continuous compliance with applicable TLV®'s.

(j) If during sampling required by § 70.1900(c) of this subchapter the ventilating air is found to contain concentrations of CO or NO_2 in excess of the action level specified by § 70.1900(c), higher action levels may be approved by the district manager based on the results of sampling that demonstrate that a higher action level will maintain continuous compliance with applicable TLV®'s. Action levels other than those specified in § 70.1900(c) shall be specified in the approved ventilation plan.

(k) As of November 25, 1977 the ventilating air quantity required where diesel-powered equipment is operated shall meet the requirements of paragraphs (f) through (j) of this section. Mine operators utilizing diesel-powered equipment in underground coal mines shall submit to the appropriate MSHA district manager a revised ventilation plan or appropriate amendments to the existing plan, in accordance with § 75.371, which implement the requirements of paragraphs (f) through (j) of this section.

19. Section 75.342 is amended by revising paragraph (b)(2) and the introductory text of paragraph (c) to read as follows:

§ 75.342 Methane monitors.

* * * * *

(b)(1) * * *

(2) The warning signal device of the methane monitor shall be visible to a person who can deenergize electric equipment or shut down diesel-powered equipment on which the monitor is mounted.

(c) The methane monitor shall automatically deenergize electric equipment or shut down diesel-powered equipment on which it is mounted when—

* * * * *

20. Section 75.344 is amended by removing paragraph (d) and redesignating paragraph (e) as new paragraph (d).

21. Section 75.360 is amended by revising paragraph (b)(7) as follows:

§ 75.360 Preshift Examination.

* * * * *

(b) * * *

(7) Areas where trolley wires or trolley feeder wires are to be or will remain energized during the oncoming shift.

* * * * *

22. Section 75.371 is amended by revising paragraph (r) and adding new paragraphs (kk), (ll), (mm), (nn), (oo), and (pp) to read as follows:

§ 75.371 Mine ventilation plan; contents.

* * * * *

(r) The minimum quantity of air that will be provided during the installation and removal of mechanized mining equipment, the location where this quantity will be provided, and the ventilation controls that will be used (see § 75.325(d), (g), and (i)).

* * * * *

(kk) Areas designated by the district manager where measurements of CO and NO_2 concentrations will be made (see § 70.1900(a)(4)).

(ll) Location where the air quantity will be maintained at the section loading point (see § 75.325(f)(2)).

(mm) Any additional location(s) required by the district manager where a minimum air quantity must be maintained for an individual unit of diesel-powered equipment. (see § 75.325(f)(5)).

(nn) The minimum air quantities that will be provided where multiple units of diesel-powered equipment are operated (see § 75.325(g) (1)–(3) and (i)).

(oo) The diesel-powered mining equipment excluded from the calculation under § 75.325(g). (see § 75.325(h)).

(pp) Action levels higher than the 50 percent level specified by § 70.1900(c). (see § 75.325(j)).

23. Section 75.380 is amended by removing paragraph (f)(3)(i) and by redesignating paragraphs (f)(3)(ii) through (f)(3)(v) as paragraphs (f)(3)(i) through (f)(3)(iv).

24. Section 75.400 is revised to read as follows:

§ 75.400 Accumulation of combustible materials.

Coal dust, including float coal dust deposited on rock-dusted surfaces, loose coal, and other combustible materials, shall be cleaned up and not be permitted to accumulate in active workings, or on diesel-powered and electric equipment therein.

25. Section 75.1710 is revised to read as follows:

§ 75.1710 Canopies or cabs; diesel-powered and electric face equipment.

In any coal mine where the height of the coalbed permits, an authorized representative of the Secretary may require that diesel-powered and electric face equipment, including shuttle cars, be provided with substantially constructed canopies or cabs to protect the miners operating such equipment from roof falls and from rib and face rolls.

26. Section 75.1710–1 is amended by replacing the phrase ''electric face equipment'' with ''diesel-powered and electric face equipment'' in the title and in paragraphs (a) and (f).

27. A new subpart T is added to part 75 to read as follows:

Subpart T—Diesel-Powered Equipment

Sec.

75.1900 Definitions.

75.1901 Diesel fuel requirements.

75.1902 Underground diesel fuel storage—general requirements.

75.1903 Underground diesel fuel storage facilities and areas; construction and safety precautions.
75.1904 Underground diesel fuel tanks and safety cans.
75.1905 Dispensing of diesel fuel.
75.1905–1 Diesel fuel piping systems.
75.1906 Transport of diesel fuel.
75.1907 Diesel-powered equipment intended for use in underground coal mines.
75.1908 Nonpermissible diesel-powered equipment-categories.
75.1909 Nonpermissible diesel-powered equipment; design and performance requirements.
75.1910 Nonpermissible diesel-powered equipment; electrical system design and performance requirements.
75.1911 Fire suppression systems for diesel-powered equipment and diesel fuel transportation units.
75.1912 Fire suppression systems for permanent underground diesel fuel storage facilities.
75.1913 Starting aids.
75.1914 Maintenance of diesel-powered equipment.
75.1915 Training and qualification of persons working on diesel-powered equipment.
75.1916 Operation of diesel-powered equipment.

Subpart T—Diesel-Powered Equipment

§ 75.1900 Definitions.

The following definitions apply in this subpart.

Diesel fuel tank. A closed metal vessel specifically designed for the storage or transport of diesel fuel.

Diesel fuel transportation unit. A self-propelled or portable wheeled vehicle used to transport a diesel fuel tank.

Noncombustible material. A material that will continue to serve its intended function for 1 hour when subjected to a fire test incorporating an ASTM E119–88 time/temperature heat input, or equivalent. The publication ASTM E119–88 ''Standard Test Methods for Fire Tests of Building Construction and Materials'' is incorporated by reference and may be inspected at any Coal Mine Health and Safety District and Subdistrict Office; at MSHA's Office of Standards, Regulations, and Variances, 4105 Wilson Boulevard, Arlington, VA 22203; or at the Office of the Federal Register, 800 North Capitol Street, NW., Washington, DC. This incorporation by reference was approved by the Director of the Federal Register in accordance with 5 U.S.C. 552(a) and 1 CFR part 51. In addition, copies of the document may be purchased from the American Society for Testing Materials (ASTM), 1916 Race Street, Philadelphia, PA 19103.

Permanent underground diesel fuel storage facility. A facility designed and constructed to remain at one location for the storage or dispensing of diesel fuel, which does not move as mining progresses.

Safety can. A metal container intended for storage, transport or dispensing of diesel fuel, with a nominal capacity of 5 gallons, listed or approved by a nationally recognized independent testing laboratory.

Temporary underground diesel fuel storage area. An area of the mine provided for the short-term storage of diesel fuel in a fuel transportation unit, which moves as mining progresses.

§ 75.1901 Diesel fuel requirements.

(a) Diesel-powered equipment shall be used underground only with a diesel fuel having a sulfur content no greater than 0.05 percent and a flash point of 100° F (38° C) or greater. Upon request, the mine operator shall provide to an authorized representative of the Secretary evidence that the diesel fuel purchased for use in diesel-powered equipment underground meets these requirements.

(b) Flammable liquids shall not be added to diesel fuel used in diesel-powered equipment underground.

(c) Only diesel fuel additives that have been registered by the Environmental Protection Agency may be used in diesel-powered equipment underground.

§ 75.1902 Underground diesel fuel storage—general requirements.

(a) All diesel fuel must be stored in:

(1) Diesel fuel tanks in permanent underground diesel fuel storage facilities;

(2) Diesel fuel tanks on diesel fuel transportation units in permanent underground diesel fuel storage facilities or in temporary underground fuel storage areas; or

(3) Safety cans.

(b) The total capacity of stationary diesel fuel tanks in permanent underground diesel fuel storage facilities must not exceed 1000 gallons.

(c)(1) Only one temporary underground diesel fuel storage area is permitted for each working section or in each area of the mine where equipment is being installed or removed.

(2) The temporary underground diesel fuel storage area must be located—

(i) Within 500 feet of the loading point;

(ii) Within 500 feet of the projected loading point where equipment is being installed; or

(iii) Within 500 feet of the last loading point where equipment is being removed.

(3) No more than one diesel fuel transportation unit at a time shall be parked in the temporary underground diesel fuel storage area.

(d) Permanent underground diesel fuel storage facilities and temporary underground diesel fuel storage areas must be—

(1) At least 100 feet from shafts, slopes, shops, or explosives magazines;

(2) At least 25 feet from trolley wires or power cables, or electric equipment not necessary for the operation of the storage facilities or areas; and

(3) In a location that is protected from damage by other mobile equipment.

(e) Permanent underground diesel fuel storage facilities must not be located within the primary escapeway.

§ 75.1903 Underground diesel fuel storage facilities and areas; construction and safety precautions.

(a) Permanent underground diesel fuel storage facilities must be—

(1) Constructed of noncombustible materials, including floors, roofs, roof supports, doors, and door frames. Exposed coal within fuel storage areas must be covered with noncombustible materials. If bulkheads are used they must be tightly sealed and must be built of or covered with noncombustible materials;

(2) Provided with either self-closing doors or a means for automatic enclosure;

(3) Provided with a means for personnel to enter and exit the facility after closure;

(4) Ventilated with intake air that is coursed into a return air course or to the surface and that is not used to ventilate working places, using ventilation controls meeting the requirements of § 75.333(e);

(5) Equipped with an automatic fire suppression system that meets the requirements of § 75.1912. Actuation of the automatic fire suppression system shall initiate the means for automatic enclosure;

(6) Provided with a means of containment capable of holding 150 percent of the maximum capacity of the fuel storage system; and

(7) Provided with a competent concrete floor or equivalent to prevent fuel spills from saturating the mine floor.

(b) Permanent underground diesel fuel storage facilities and temporary underground diesel fuel storage areas must be—

(1) Equipped with at least 240 pounds of rock dust and provided with two portable multipurpose dry chemical type (ABC) fire extinguishers that are listed or approved by a nationally recognized independent testing laboratory and have a 10A:60B:C or

higher rating. Both fire extinguishers must be easily accessible to personnel, and at least one fire extinguisher must be located outside of the storage facility or area upwind of the facility, in intake air; or

(2) Provided with three portable multipurpose dry chemical type (ABC) fire extinguishers that are listed or approved by a nationally recognized independent testing laboratory and have a 10A:60B:C or higher rating. All fire extinguishers must be easily accessible to personnel, and at least one fire extinguisher must be located outside of the storage facility or area upwind of the facility, in intake air.

(3) Identified with conspicuous markings designating diesel fuel storage; and

(4) Maintained to prevent the accumulation of water.

(c) Welding or cutting other than that performed in accordance with paragraph (d) of this section shall not be performed within 50 feet of a permanent underground diesel fuel storage facility or a temporary underground diesel fuel storage area.

(d) When it is necessary to weld, cut, or solder pipelines, tanks, or other containers that may have contained diesel fuel, these practices shall be followed:

(1) Cutting or welding shall not be performed on or within pipelines, tanks, or other containers that have contained diesel fuel until they have been thoroughly purged and cleaned or inerted and a vent or opening is provided to allow for sufficient release of any buildup pressure before heat is applied.

(2) Diesel fuel shall not be allowed to enter pipelines, tanks, or containers that have been welded, soldered, brazed, or cut until the metal has cooled to ambient temperature.

§ 75.1904 Underground diesel fuel tanks and safety cans.

(a) Diesel fuel tanks used underground shall—

(1) Have steel walls of a minimum 3/16-inch thickness, or walls made of other metal of a thickness that provides equivalent strength;

(2) Be protected from corrosion;

(3) Be of seamless construction or have liquid tight welded seams;

(4) Not leak; and

(5) For stationary tanks in permanent underground diesel fuel storage facilities, be placed on supports constructed of noncombustible material so that the tanks are at least 12 inches above the floor.

(b) Underground diesel fuel tanks must be provided with—

(1) Devices for emergency venting designed to open at a pressure not to exceed 2.5 psi according to the following—

(i) Tanks with a capacity greater than 500 gallons must have an emergency venting device whose area is equivalent to a pipe with a nominal inside diameter of 5 inches or greater; and

(ii) Tanks with a capacity of 500 gallons or less must have an emergency venting device whose area is equivalent to a pipe with a nominal inside diameter of 4 inches or greater.

(2) Tethered or self-closing caps for stationary tanks in permanent underground diesel fuel storage facilities and self-closing caps for diesel fuel tanks on diesel fuel transportation units;

(3) Vents to permit the free discharge of liquid, at least as large as the fill or withdrawal connection, whichever is larger, but not less than 1¼ inch nominal inside diameter;

(4) Liquid tight connections for all tank openings that are—

(i) Identified by conspicuous markings that specify the function; and

(ii) Closed when not in use.

(5) Vent pipes that drain toward the tank without sagging and are higher than the fill pipe opening;

(6) Shutoff valves located as close as practicable to the tank shell on each connection through which liquid can normally flow; and

(7) An automatic closing, heat-actuated valve on each withdrawal connection below the liquid level.

(c) When tanks are provided with openings for manual gauging, liquid tight, tethered or self-closing caps or covers must be provided and must be kept closed when not open for gauging.

(d) Surfaces of the tank and its associated components must be protected against damage by collision.

(e) Before being placed in service, tanks and their associated components must be tested for leakage at a pressure equal to the working pressure, except tanks and components connected directly to piping systems, which must be properly designed for the application.

(f) Safety cans must be:

(1) Limited to a nominal capacity of 5 gallons or less;

(2) Equipped with a flexible or rigid tubular nozzle attached to a valved spout;

(3) Provided with a vent valve designed to open and close simultaneously and automatically with the opening and closing of the pouring valve; and

(4) Designed so that they will safely relieve internal pressure when exposed to fire.

§ 75.1905 Dispensing of diesel fuel.

(a) Diesel-powered equipment in underground coal mines may be refueled only from safety cans, from tanks on diesel fuel transportation units, or from stationary tanks.

(b) Fuel that is dispensed from other than safety cans must be dispensed by means of—

(1) Gravity feed with a hose equipped with a nozzle with a self-closing valve and no latch-open device;

(2) A manual pump with a hose equipped with a nozzle containing a self-closing valve; or

(3) A powered pump with:

(i) An accessible emergency shutoff switch for each nozzle;

(ii) A hose equipped with a self-closing valve and no latch-open device; and

(iii) An anti-siphoning device.

(c) Diesel fuel must not be dispensed using compressed gas.

(d) Diesel fuel must not be dispensed to the fuel tank of diesel-powered equipment while the equipment engine is running.

(e) Powered pumps shall be shut off when fuel is not being dispensed.

§ 75.1905–1 Diesel fuel piping systems.

(a) Diesel fuel piping systems from the surface must be designed and operated as dry systems, unless an automatic shutdown is incorporated that prevents accidental loss or spillage of fuel and that activates an alarm system.

(b) All piping, valves and fittings must be—

(1) Capable of withstanding working pressures and stresses;

(2) Capable of withstanding four times the static pressures;

(3) Compatible with diesel fuel; and

(4) Maintained in a manner that prevents leakage.

(c) Pipelines must have manual shutoff valves installed at the surface filling point, and at the underground discharge point.

(d) If diesel fuel lines are not buried in the ground sufficiently to protect them from damage, shutoff valves must be located every 300 feet.

(e) Shutoff valves must be installed at each branch line where the branch line joins the main line.

(f) An automatic means must be provided to prevent unintentional transfer of diesel fuel from the surface into the permanent underground diesel fuel storage facility.

(g) Diesel fuel piping systems from the surface shall only be used to transport diesel fuel directly to stationary tanks or diesel fuel transportation units in a permanent underground diesel fuel storage facility.

(h) The diesel fuel piping system must not be located in a borehole with electric power cables.

(i) Diesel fuel piping systems located in entries must not be located on the same side of the entry as electric cables or power lines. Where it is necessary for piping systems to cross electric cables or power lines, guarding must be provided to prevent severed electrical cables or power lines near broken fuel lines.

(j) Diesel fuel piping systems must be protected and located to prevent physical damage.

§ 75.1906 Transport of diesel fuel.

(a) Diesel fuel shall be transported only by diesel fuel transportation units or in safety cans.

(b) No more than one safety can shall be transported on a vehicle at any time. The can must be protected from damage during transport. All other safety cans must be stored in permanent underground diesel fuel storage facilities.

(c) Safety cans that leak must be promptly removed from the mine.

(d) Diesel fuel transportation unit tanks and safety cans must be conspicuously marked as containing diesel fuel.

(e) Diesel fuel transportation units must transport no more than 500 gallons of diesel fuel at a time.

(f) Tanks on diesel fuel transportation units must be permanently fixed to the unit and have a total capacity of no greater than 500 gallons of diesel fuel.

(g) Non-self-propelled diesel fuel transportation units with electrical components for dispensing fuel that are connected to a source of electrical power must be protected by a fire suppression device that meets the requirements of §§ 75.1107–3 through 75.1107–6 and §§ 75.1107–8 and 75.1107–16.

(h) Diesel fuel transportation units and vehicles transporting safety cans containing diesel fuel must have at least two multipurpose, dry chemical type (ABC) fire extinguishers, listed or approved by a nationally recognized independent testing laboratory and having a 10A:60B:C or higher rating, with one fire extinguisher provided on each side of the vehicle.

(i) Diesel fuel transportation units shall be parked only in permanent underground diesel fuel storage facilities or temporary underground diesel fuel storage areas when not in use.

(j) When the distance between a diesel fuel transportation unit and an energized trolley wire at any location is less than 12 inches, the requirements of § 75.1003–2 must be followed.

(k) Diesel fuel shall not be transported on or with mantrips or on conveyor belts.

(l) Diesel fuel shall be stored and handled in accordance with the requirements of §§ 75.1902 through 75.1906 of this part as of November 25, 1997.

§ 75.1907 Diesel-powered equipment intended for use in underground coal mines.

(a) As of November 25, 1996 all diesel-powered equipment used where permissible electrical equipment is required must be approved under part 36 of this chapter.

(b) Diesel-powered equipment approved under part 36 of this chapter must be provided with additional safety features in accordance with the following time schedule:

(1) As of April 25, 1997 the equipment must have a safety component system that limits surface temperatures to those specified in subpart F of part 7 of this title;

(2) As of November 25, 1999 the equipment must have an automatic or manual fire suppression system that meets the requirements of § 75.1911 of this part, and at least one portable multipurpose dry chemical type (ABC) fire extinguisher, listed or approved by a nationally recognized independent testing laboratory and having a 10A:60B:C or higher rating. The fire extinguisher must be located within easy reach of the equipment operator and be protected from damage by collision.

(3) As of November 25, 1999 the equipment must have a brake system that meets the requirements of § 75.1909 (b)(6), (b)(7), (b)(8), (c), (d), and (e);

(4) As of November 25, 1997 a particulate index and dilution air quantity shall be determined for the equipment in accordance with subpart E of part 7 of this chapter; and

(5) Permissible diesel-powered equipment manufactured on or after November 25, 1999 and that is used in an underground coal mine shall incorporate a power package approved in accordance with part 7, subpart F of this chapter.

(c) As of November 25, 1999 nonpermissible diesel-powered equipment, except the special category of equipment under § 75.1908(d), shall meet the requirements of §§ 75.1909 and 75.1910 of this part.

§ 75.1908 Nonpermissible diesel-powered equipment—categories.

(a) Heavy-duty diesel-powered equipment includes—

(1) Equipment that cuts or moves rock or coal;

(2) Equipment that performs drilling or bolting functions;

(3) Equipment that moves longwall components;

(4) Self-propelled diesel fuel transportation units and self-propelled lube units; or

(5) Machines used to transport portable diesel fuel transportation units or portable lube units.

(b) Light-duty diesel-powered equipment is any diesel-powered equipment that does not meet the criteria of paragraph (a).

(c) For the purposes of this subpart, the following equipment is considered attended:

(1) Any machine or device operated by a miner; or

(2) Any machine or device that is mounted in the direct line of sight of a job site located within 500 feet of such machine or device, which job site is occupied by a miner.

(d) Diesel-powered ambulances and fire fighting equipment are a special category of equipment that may be used underground only in accordance with the mine fire fighting and evacuation plan under § 75.1101–23.

§ 75.1909 Nonpermissible diesel-powered equipment; design and performance requirements.

(a) Nonpermissible diesel-powered equipment, except for the special category of equipment under § 75.1908(d), must be equipped with the following features:

(1) An engine approved under subpart E of part 7 of this title equipped with an air filter sized in accordance with the engine manufacturer's recommendations, and an air filter service indicator set in accordance with the engine manufacturer's recommendations;

(2) At least one portable multipurpose dry chemical type (ABC) fire extinguisher listed or approved by a nationally recognized independent testing laboratory with a 10A:60B:C or higher rating. The fire extinguisher must be located within easy reach of the equipment operator and protected from damage;

(3) A fuel system specifically designed for diesel fuel meeting the following requirements:

(i) A fuel tank and fuel lines that do not leak;

(ii) A fuel tank that is substantially constructed and protected against damage by collision;

(iii) A vent opening that maintains atmospheric pressure in the fuel tank, and that is designed to prevent fuel from splashing out of the vent opening;

(iv) A self-closing filler cap on the fuel tank;

(v) The fuel tank, filler and vent must be located so that leaks or spillage during refueling will not contact hot surfaces;

(vi) Fuel line piping must be either steel-wire reinforced; synthetic elastomer-covered hose suitable for use with diesel fuel that has been tested and has been determined to be fire-resistant by the manufacturer; or metal;

(vii) Fuel line piping must be clamped;

(viii) Primary fuel lines must be located so that fuel line leaks do not contact hot surfaces;

(ix) The fuel lines must be separated from electrical wiring and protected from damage in ordinary use;

(x) A manual shutoff valve must be installed in the fuel system as close as practicable to the tank; and

(xi) A water separator and fuel filter(s) must be provided.

(4) A sensor to monitor the temperature and provide a visual warning of an overheated cylinder head on air-cooled engines;

(5) Guarding to protect fuel, hydraulic, and electric lines when such lines pass near rotating parts or in the event of shaft failure;

(6) Hydraulic tanks, fillers, vents, and lines located to prevent spillage or leaks from contacting hot surfaces;

(7) Reflectors or warning lights mounted on the equipment which can be readily seen in all directions;

(8) A means to direct exhaust gas away from the equipment operator, persons on board the machine, and combustible machine components;

(9) A means to prevent unintentional free and uncontrolled descent of personnel-elevating work platforms; and

(10) A means to prevent the spray from ruptured hydraulic or lubricating oil lines from being ignited by contact with engine exhaust system component surfaces.

(b) Self-propelled nonpermissible diesel-powered equipment must have the following features in addition to those in paragraph (a):

(1) A means to ensure that no stored hydraulic energy that will cause machine articulation is available after the engine is shut down;

(2) A neutral start feature which ensures that engine cranking torque will not be transmitted through the powertrain and cause machine movement on vehicles utilizing fluid power transmissions;

(3) For machines with steering wheels, brake pedals, and accelerator pedals, controls which are of automobile orientation;

(4) An audible warning device conveniently located near the equipment operator;

(5) Lights provided and maintained on both ends of the equipment. Equipment normally operated in both directions must be equipped with headlights for both directions;

(6) Service brakes that act on each wheel of the vehicle and that are designed such that failure of any single component, except the brake actuation pedal or other similar actuation device, must not result in a complete loss of service braking capability;

(7) Service brakes that safely bring the fully loaded vehicle to a complete stop on the maximum grade on which it is operated; and

(8) No device that traps a column of fluid to hold the brake in the applied position shall be installed in any brake system, unless the trapped column of fluid is released when the equipment operator is no longer in contact with the brake activation device.

(c) Self-propelled nonpermissible heavy-duty diesel-powered equipment under § 75.1908(a), except rail-mounted equipment, shall be provided with a supplemental braking system that:

(1) Engages automatically within 5 seconds of the shutdown of the engine;

(2) Safely brings the equipment when fully loaded to a complete stop on the maximum grade on which it is operated;

(3) Holds the equipment stationary, despite any contraction of brake parts, exhaustion of any nonmechanical source of energy, or leakage;

(4) Releases only by a manual control that does not operate any other equipment function;

(5) Has a means in the equipment operator's compartment to apply the brakes manually without the engine operating, and a means to release and reengage the brakes without the engine operating; and

(6) Has a means to ensure that the supplemental braking system is released before the equipment can be trammed, and is designed to ensure the brake is fully released at all times while the equipment is trammed.

(d) Self-propelled nonpermissible light-duty diesel-powered equipment under § 75.1908(b), except rail-mounted equipment, must be provided with a parking brake that holds the fully loaded equipment stationary on the maximum grade on which it is operated despite any contraction of the brake parts, exhaustion of any nonmechanical source of energy, or leakage.

(e) The supplemental and park brake systems required by paragraphs (c) and (d) must be applied when the equipment operator is not at the controls of the equipment, except during movement of disabled equipment.

(f) Self-propelled personnel-elevating work platforms must be provided with a means to ensure that the parking braking system is released before the equipment can be trammed, and must be designed to ensure the brake is fully released at all times while the equipment is trammed.

(g) Any nonpermissible equipment that discharges its exhaust directly into a return air course must be provided with a power package approved under subpart F of part 7 of this title.

(h) Self-propelled nonpermissible heavy-duty diesel-powered equipment meeting the requirements of § 75.1908(a) must be provided with an automatic fire suppression system meeting the requirements of § 75.1911.

(i) Self-propelled nonpermissible light-duty diesel-powered equipment meeting the requirements of § 75.1908(b) must be provided with an automatic or manual fire suppression system meeting the requirements of § 75.1911.

(j) Nonpermissible equipment that is not self-propelled must have the following features in addition to those listed in paragraph (a):

(1) A means to prevent inadvertent movement of the equipment when parked;

(2) Safety chains or other suitable secondary connections on equipment that is being towed; and

(3) An automatic fire suppression system meeting the requirements of § 75.1911.

§ 75.1910 Nonpermissible diesel-powered equipment; electrical system design and performance requirements.

Electrical circuits and components associated with or connected to electrical systems on nonpermissible diesel-powered equipment utilizing storage batteries and integral charging systems, except for the special category of equipment under § 75.1908(d), must conform to the following requirements:

(a) Overload and short circuit protection must be provided for electric circuits and components in accordance with §§ 75.518 and 75.518–1 of this part;

(b) Each electric conductor from the battery to the starting motor must be protected against short circuit by fuses or other circuit-interrupting devices placed as near as practicable to the battery terminals;

(c) Each branch circuit conductor connected to the main circuit between the battery and charging generator must be protected against short circuit by fuses or other automatic circuit-interrupting devices;

(d) The electrical system shall be equipped with a circuit-interrupting

device by means of which all power conductors can be deenergized. The device must be located as close as practicable to the battery terminals and be designed to operate within its electrical rating without damage. The device shall not automatically reset after being actuated. All magnetic circuit-interrupting devices must be mounted in a manner to preclude their closing by force of gravity;

(e) Each motor and charging generator must be protected by an automatic overcurrent device. One protective device will be acceptable when two motors of the same rating operate simultaneously and perform virtually the same duty;

(f) Each ungrounded conductor must have insulation compatible with the impressed voltage. Insulation materials must be resistant to deterioration from engine heat and oil. Electric conductors must meet the applicable requirements of §§ 75.513 and 75.513–1, except electric conductors for starting motors, which must only meet the requirements of § 75.513;

(g) All wiring must have adequate mechanical protection to prevent damage to the cable that might result in short circuits;

(h) Sharp edges and corners must be removed at all points where there is a possibility of damaging wires, cables, or conduits by cutting or abrasion. The insulation of the cables within a battery box must be protected against abrasion;

(i) When insulated wires other than cables pass through metal frames, the holes must be substantially bushed with insulated bushings. Cables must enter metal frames of motors, splice boxes, and electric components only through proper fittings. All electrical connections and splices must be mechanically and electrically efficient, and suitable connectors shall be used. All electrical connectors or splices in insulated wire must be reinsulated at least to the same degree of protection as the remainder of the wire;

(j) The battery must be secured to prevent movement, and must be protected from external damage by position. Batteries that are not protected from external damage by position must be enclosed in a battery box. Flame-resistant insulation treated to resist chemical reaction to electrolyte must be provided on battery connections to prevent battery terminals from contacting conducting surfaces;

(k) A battery box, including the cover, must be constructed of steel with a minimum thickness of ⅛ inch, or of a material other than steel that provides equivalent strength;

(l) Battery-box covers must be lined with a flame-resistant insulating material permanently attached to the underside of the cover, unless equivalent protection is provided. Battery-box covers must be provided with a means for securing them in closed position. At least ½ inch of air space must be provided between the underside of the cover and the top of the battery, including terminals;

(m) Battery boxes must be provided with ventilation openings to prevent the accumulation of flammable or toxic gases or vapors within the battery box. The size and locations of openings for ventilation must prevent direct access to battery terminals;

(n) The battery must be insulated from the battery-box walls and supported on insulating materials. Insulating materials that may be subject to chemical reaction with electrolyte must be treated to resist such action; and

(o) Drainage holes must be provided in the bottom of each battery box.

§ 75.1911 Fire suppression systems for diesel-powered equipment and fuel transportation units.

(a) The fire suppression system required by §§ 75.1907 and 75.1909 shall be a multipurpose dry chemical type (ABC) fire suppression system listed or approved by a nationally recognized independent testing laboratory and appropriate for installation on diesel-powered equipment and fuel transportation units.

(1) The system shall be installed in accordance with the manufacturer's specifications and the limitations of the listing or approval.

(2) The system shall be installed in a protected location or guarded to minimize physical damage from routine vehicle operations.

(3) Suppressant agent distribution tubing or piping shall be secured and protected against damage, including pinching, crimping, stretching, abrasion, and corrosion.

(4) Discharge nozzles shall be positioned and aimed for maximum fire suppression effectiveness. Nozzles shall also be protected against the entrance of foreign materials such as mud, coal dust, or rock dust.

(b) The fire suppression system shall provide fire suppression and, if automatic, fire detection for the engine including the starter, transmission, hydraulic pumps and tanks, fuel tanks, exposed brake units, air compressors and battery areas on diesel-powered equipment and electric panels or controls used on fuel transportation units and other areas as necessary.

(c) If automatic, the fire suppression system shall include audible and visual alarms to warn of fires or system faults.

(d) The fire suppression system shall provide for automatic engine shutdown. If the fire suppression system is automatic, engine shutdown and discharge of suppressant agent may be delayed for a maximum of 15 seconds after the fire is detected by the system.

(e) The fire suppression system shall be operable by at least two manual actuators. One actuator shall be located on each side of the equipment. If the equipment is provided with an operator's compartment, one of the manual actuators shall be located in the compartment within reach of the operator.

(f) The fire suppression system shall remain operative in the event of engine shutdown, equipment electrical system failure, or failure of any other equipment system.

(g) The electrical components of each fire suppression system installed on equipment used where permissible electric equipment is required shall be permissible or intrinsically safe and such components shall be maintained in permissible or intrinsically safe condition.

(h) Electrically operated detection and actuation circuits shall be monitored and provided with status indicators showing power and circuit continuity. If the system is not electrically operated, a means shall be provided to indicate the functional readiness status of the detection system.

(i) Each fire suppression system shall be tested and maintained in accordance with the manufacturer's recommended inspection and maintenance program and as required by the nationally recognized independent testing laboratory listing or approval, and be visually inspected at least once each week by a person trained to make such inspections.

(j) *Recordkeeping* Persons performing inspections and tests of fire suppression systems under paragraph (i) shall record when a fire suppression system does not meet the installation or maintenance requirements of this section.

(1) The record shall include the equipment on which the fire suppression system did not meet the installation or maintenance requirements of this section, the defect found, and the corrective action taken.

(2) Records are to be kept manually in a secure manner not susceptible to alteration or recorded electronically in a secured computer system that is not susceptible to alteration.

(3) Records shall be maintained at a surface location at the mine for one year

and made available for inspection by an authorized representative of the Secretary and miners' representatives.

(k) All miners normally assigned to the active workings of the mine shall be instructed about the hazards inherent to the operation of the fire suppression systems and, where appropriate, the safeguards available for each system.

(l) For purposes of § 75.380(f), a fire suppression system installed on diesel-powered equipment and meeting the requirements of this section is equivalent to a fire suppression system meeting the requirements of §§ 75.1107–3 through 75.1107–16.

§ 75.1912 Fire suppression systems for permanent underground diesel fuel storage facilities.

(a) The fire suppression system required by § 75.1903 shall be an automatic multipurpose dry chemical type (ABC) fire suppression system listed or approved as an engineered dry chemical extinguishing system by a nationally recognized independent testing laboratory and appropriate for installation at a permanent underground diesel fuel storage facility.

(1) Alternate types of fire suppression systems shall be approved in accordance with § 75.1107–13 of this part.

(2) The system shall be installed in accordance with the manufacturer's specifications and the limitations of the listing or approval.

(3) The system shall be installed in a protected location or guarded to prevent physical damage from routine operations.

(4) Suppressant agent distribution tubing or piping shall be secured and protected against damage, including pinching, crimping, stretching, abrasion, and corrosion.

(5) Discharge nozzles shall be positioned and aimed for maximum fire suppression effectiveness in the protected areas. Nozzles must also be protected against the entrance of foreign materials such as mud, coal dust, and rock dust.

(b) The fire suppression system shall provide automatic fire detection and automatic fire suppression for all areas within the facility.

(c) Audible and visual alarms to warn of fire or system faults shall be provided at the protected area and at a surface location which is continually monitored by a person when personnel are underground. In the event of a fire, personnel shall be warned in accordance with the provisions set forth in § 75.1101–23.

(d) The fire suppression system shall deenergize all power to the diesel fuel storage facility when actuated except that required for automatic enclosure and alarms.

(e) Fire suppression systems shall include two manual actuators located as follows:

(1) At least one within the fuel storage facility; and

(2) At least one a safe distance away from the storage facility and located in intake air, upwind of the storage facility.

(f) The fire suppression system shall remain operational in the event of electrical system failure.

(g) Electrically operated detection and actuation circuits shall be monitored and provided with status indicators showing power and circuit continuity. If the system is not electrically operated, a means shall be provided to indicate the functional readiness status of the detection system.

(h) Each fire suppression system shall be tested and maintained in accordance with the manufacturer's recommended inspection and maintenance program and as required by the nationally recognized independent testing laboratory listing or approval, and be visually inspected at least once each week by a person trained to make such inspections.

(i) *Recordkeeping.* Persons performing inspections and tests of fire suppression systems under paragraph (h) shall record when a fire suppression system does not meet the installation or maintenance requirements of this section.

(1) The record shall include the facility whose fire suppression system did not meet the installation or maintenance requirements of this section, the defect found, and the corrective action taken.

(2) Records are to be kept manually in a secure manner not susceptible to alteration or recorded electronically in a secured computer system that is not susceptible to alteration.

(3) Records shall be maintained at a surface location at the mine for one year and made available for inspection by an authorized representative of the Secretary and miners' representatives.

(j) All miners normally assigned to the active workings of the mine shall be instructed about the hazards inherent to the operation of the fire suppression systems and, where appropriate, the safeguards available for each system.

§ 75.1913 Starting aids.

(a) Volatile fuel starting aids shall be used in accordance with recommendations provided by the starting aid manufacturer, the engine manufacturer, and the machine manufacturer.

(b) Containers of volatile fuel starting aids shall be conspicuously marked to indicate the contents. When not in use, containers of volatile fuel starting aids shall be stored in metal enclosures that are used only for storage of starting aids. Such metal enclosures must be conspicuously marked, secured, and protected from damage.

(c) Volatile fuel starting aids shall not be:

(1) Taken into or used in areas where permissible equipment is required;

(2) Used in the presence of open flames or burning flame safety lamps, or when welding or cutting is taking place; or

(3) Used in any area where 1.0 percent or greater concentration of methane is present.

(d) Compressed oxygen or compressed flammable gases shall not be connected to diesel air-start systems.

§ 75.1914 Maintenance of diesel-powered equipment.

(a) Diesel-powered equipment shall be maintained in approved and safe condition or removed from service.

(b) Maintenance and repairs of approved features and those features required by §§ 75.1909 and 75.1910 on diesel-powered equipment shall be made only by a person qualified under § 75.1915.

(c) The water scrubber system on diesel-powered equipment shall be drained and flushed, by a person who is trained to perform this task, at least once on each shift in which the equipment is operated.

(d) The intake air filter on diesel-powered equipment shall be replaced or serviced, by a person who is trained to perform this task, when the intake air pressure drop device so indicates or when the engine manufacturer's maximum allowable air pressure drop level is exceeded.

(e) Mobile diesel-powered equipment that is to be used during a shift shall be visually examined by the equipment operator before being placed in operation. Equipment defects affecting safety shall be reported promptly to the mine operator.

(f) All diesel-powered equipment shall be examined and tested weekly by a person qualified under § 75.1915.

(1) Examinations and tests shall be conducted in accordance with approved checklists and manufacturers' maintenance manuals.

(2) Persons performing weekly examinations and tests of diesel-powered equipment under this paragraph shall make a record when the equipment is not in approved or safe condition. The record shall include the

equipment that is not in approved or safe condition, the defect found, and the corrective action taken.

(g) Undiluted exhaust emissions of diesel engines in diesel-powered equipment approved under part 36 and heavy-duty nonpermissible diesel-powered equipment as defined in § 75.1908(a) in use in underground coal mines shall be tested and evaluated weekly by a person who is trained to perform this task. The mine operator shall develop and implement written standard operating procedures for such testing and evaluation that specify the following:

(1) The method of achieving a repeatable loaded engine operating condition for each type of equipment;

(2) Sampling and analytical methods (including calibration of instrumentation) that are capable of accurately detecting carbon monoxide in the expected concentrations;

(3) The method of evaluation and interpretation of the results;

(4) The concentration or changes in concentration of carbon monoxide that will indicate a change in engine performance. Carbon monoxide concentration shall not exceed 2500 parts per million; and

(5) The maintenance of records necessary to track engine performance.

(h) *Recordkeeping.* Records required by paragraphs (f)(2) and (g)(5) shall be—

(1) Recorded in a secure book that is not susceptible to alteration, or recorded electronically in a computer system that is secure and not susceptible to alteration; and

(2) Retained at a surface location at the mine for at least 1 year and made available for inspection by an authorized representative of the Secretary and by miners' representatives.

(i) Diesel-powered equipment must be maintained in accordance with this part as of November 25, 1997.

§ 75.1915 Training and qualification of persons working on diesel-powered equipment.

(a) To be qualified to perform maintenance, repairs, examinations and tests on diesel-powered equipment, as required by § 75.1914, a person must successfully complete a training and qualification program that meets the requirements of this section. A person qualified to perform these tasks shall be retrained as necessary to maintain the ability to perform all assigned diesel-powered equipment maintenance, repairs, examinations and tests.

(b) A training and qualification program under this section must:

(1) Be presented by a competent instructor;

(2) Be sufficient to prepare or update a person's ability to perform all assigned tasks with respect to diesel-powered equipment maintenance, repairs, examinations and tests;

(3) Address, at a minimum, the following:

(i) The requirements of subpart T of this part;

(ii) Use of appropriate power package or machine checklists to conduct tests to ensure that diesel-powered equipment is in approved and safe condition, with acceptable emission levels;

(iii) Proper maintenance of approved features and the correct use of the appropriate maintenance manuals, including machine adjustments, service, and assembly;

(iv) Diesel-powered equipment fire suppression system tests and maintenance;

(v) Fire and ignition sources and their control or elimination, including cleaning of the equipment;

(vi) Safe fueling procedures and maintenance of the fuel system of the equipment; and

(vii) Intake air system maintenance and tests.

(4) Include an examination that requires demonstration of the ability to perform all assigned tasks with respect to diesel-powered equipment maintenance, repairs, examinations and tests; and

(5) Be in writing. The written program shall include a description of the course content, materials, and teaching methods for initial training and retraining.

(c) *Recordkeeping.* The operator shall maintain a copy of the training and qualification program required by this section and a record of the names of all persons qualified under the program.

(1) The record of the names of qualified persons shall be made in a manner that is not susceptible to alteration, or recorded electronically in a computer system that is secure and not susceptible to alteration.

(2) The training and qualification program and record of qualified persons are to be kept at surface location of the mine and made available for inspection by an authorized representative of the Secretary and by miners' representatives.

§ 75.1916 Operation of diesel-powered equipment.

(a) Diesel-powered equipment shall be operated at a speed that is consistent with the type of equipment being operated, roadway conditions, grades, clearances, visibility, and other traffic.

(b) Operators of mobile diesel-powered equipment shall maintain full control of the equipment while it is in motion.

(c) Standardized traffic rules, including speed limits, signals and warning signs, shall be established at each mine and followed.

(d) Except as required in normal mining operations, mobile diesel-powered equipment shall not be idled.

(e) Diesel-powered equipment shall not be operated unattended.

[FR Doc. 96–26838 Filed 10–24–96; 8:45 am]

BILLING CODE 4510–43–P