FAI-F00B1D6-1

UNITED STATES
DEPARTMENT OF LABOR
MINE SAFETY AND HEALTH ADMINISTRATION

REPORT OF INVESTIGATION

Underground
(Copper)

Machinery Accident Fatality Report
March 12, 2026

Redpath USA Corporation (R83)
Sparks, Nevada

at

Kennecott Keystone Underground
Kennecott Utah Copper LLC
South Jordan, Salt Lake County, Utah
ID No. 42-01392

Accident Investigators

Lee Hughes
Supervisory Special Investigator

Ruben Ruiz
Mine Safety and Health Specialist

Originating Office
Mine Safety and Health Administration
Denver District
1 Denver Federal Center, Bldg. 53
Denver, Colorado 80225
Nickolas Gutierrez, District Manager

TABLE OF CONTENTS

OVERVIEW 1

GENERAL INFORMATION 1

DESCRIPTION OF THE ACCIDENT 2

INVESTIGATION OF THE ACCIDENT 3

DISCUSSION 4

- Location of the Accident 4
- Equipment Involved 4
- Work Procedures 4
- Examinations 5
- Training and Experience 5

ROOT CAUSE ANALYSIS 5

CONCLUSION 6

ENFORCEMENT ACTIONS 7

APPENDIX A – Sandvik DD422i Drill Rig 8

APPENDIX B – Rotary Actuator on Feed Unit 1 9

APPENDIX C – Persons Participating in the Investigation 10



OVERVIEW

On March 12, 2026, at 5:13 a.m., Brian Cameli, a 37-year-old contract mechanic with over 5 years of mining experience, died when the feed unit of the drill rig he was working on rotated suddenly and crushed him.

The accident occurred because the equipment was not blocked against hazardous motion.

GENERAL INFORMATION

Kennecott Utah Copper LLC owns and operates the Kennecott Keystone Underground mine, a copper mine in South Jordan, Salt Lake County, Utah. The mine employs 82 miners and operates two 12-hour shifts per day, 7 days per week. The mine employs a contractor, Redpath USA Corporation (Redpath), that provides drilling, blasting, mucking, and maintenance services. Ore is stockpiled outside the portal. Haul trucks from the nearby Bingham Canyon Mine (MSHA ID 42-00149) then transport the ore to the Bingham Canyon Mine's surface facilities for further

processing. Redpath contracted Quality Mechanical Repair (contractor ID C3067) for additional mechanical needs. Cameli was employed by Redpath.

The principal management officials at the Kennecott Keystone Underground mine at the time of the accident were:

Paul Wiedman	General Manager Underground
David Munk	Superintendent Mobile Maintenance
Shane Sandbak	Senior Advisor Health Safety and Environment

The principal management officials for Redpath at the time of the accident were:

Cory Cole	Area Manager
Steven Immenschuh	Project Manager
Luke Bowers	Maintenance Superintendent

The principal management official for Quality Mechanical Repair at the time of the accident was:

Moises Dominguez	Owner

The Mine Safety and Health Administration (MSHA) completed the last regular safety and health inspection at this mine on March 12, 2026. The 2025 non-fatal days lost incident rate for the Kennecott Keystone Underground mine was zero, compared to the national average of 1.28 for mines of this type.

DESCRIPTION OF THE ACCIDENT

On March 11, 2026, at 6:09 p.m., the crew van arrived at the 4590-surface maintenance shop. Cameli, who is regularly assigned to crew three, volunteered to begin his rotation early with crew one.

At 6:33 p.m., Daniel O'Dell, lead mechanic for Redpath, gave the crew their assignments for the shift. O'Dell assigned Cameli and Elijah Van Hout, mechanic for Quality Mechanical Repair, to perform preventive maintenance on the Sandvik DD422i drill rig. This included replacing the rotary actuator on Boom 1 and the hydraulic rock drill on Boom 2. Phillip Clark, shift supervisor for Redpath, assigned Bryce Walston, bolt borer for Redpath, and the normal operator of this drill rig, to help perform preventive maintenance. According to interviews and video surveillance, Cameli and Van Hout removed the old hydraulic rock drill from Boom 2 and attached the new one in the early hours of their shift. Then Cameli pulled the drill rig further into the shop so they could drain the hydraulic tank, replace filters, and refill it with new hydraulic oil. For reference, an image of the drill rig is in Appendix A.

On March 12, 2026, at 3:44 a.m., Cameli began working to remove the rotary actuator on Boom 1. Cameli placed the feed unit on two stands and unbolted the rotary actuator from the feed unit. He rotated the boom out from under the feed unit so the rotary actuator could be unbolted from

the boom. When the new rotary actuator was brought to the shop, Cameli and Van Hout placed it in front of the boom, and Cameli pointed out that the rotary actuator had timing marks on it already. Cameli remarked there was no need to time the rotary actuator again, they could just install it. Cameli and Van Hout attached the rotary actuator to the boom, repositioned it back under the feed unit, and bolted it onto the boom. By doing this, the air was not bled from the rotary actuator, which typically happens when the timing is checked. At 4:57 a.m., Walston lifted the feed unit off the stands, and he, Cameli, and Van Hout torqued the bolts. For reference, a diagram of the rotary actuator on Feed Unit 1 is in Appendix B.

At 5:03 a.m., Cameli and Van Hout returned to Boom 2 with Walston in the cab. Cameli wanted to conduct a function test to ensure everything was working correctly on the hydraulic rock drill. During the function test, they found a problem with the left-hand rotation. The hose swelled but there was no movement. Van Hout went into the cab to observe the gauge and found low pressure. Van Hout exited the cab and worked to diagnose the problem with the left-hand rotation, Cameli and Walston returned to work on the rotary actuator.

At 5:10 a.m., Cameli was working on Feed Unit 1. According to video surveillance, Cameli opened the S1, S2, and S3 bleeder screws on the rotary actuator to bleed air from the hydraulic system. Walston saw Cameli opening these hydraulic bleeder screws just before Walston entered the cab. After Walston entered the cab, Cameli gave him a hand motion, which Walston believed was an instruction for Walston to rotate the feed rail, but nothing happened. When Cameli stepped back up to the feed rail to reach the S3 bleeder, the feed unit rotated onto him. Van Hout, who was working at Feed Unit 2 when he heard a crash, turned and saw Cameli under the feed unit and began motioning to Walston to raise the feed unit. O'Dell heard the commotion and went to the drill rig. After seeing Cameli on the floor under the feed unit, O'Dell made a mayday call at 5:14 a.m. O'Dell started assessing Cameli and began cardiopulmonary resuscitation (CPR). Members of the Underground Emergency Response Team (UGERT) began arriving on scene and assisting with CPR.

At 5:27 a.m., the Surface Emergency Response Team (SERT) arrived with the ambulance and assisted the UGERT with resuscitation efforts. At approximately 5:50 a.m., Unified Ambulance arrived and continued with resuscitation efforts. At 6:00 a.m., life flight landed at the landing zone. At 6:11 a.m., paramedics ceased resuscitation efforts per medical directive. Emily Simpkins, AirMed registered nurse, pronounced Cameli dead at 6:12 a.m.

INVESTIGATION OF THE ACCIDENT

On March 12, 2026, at 5:45 a.m., Scott McKay, mine monitoring and control specialist, called the Department of Labor National Contact Center (DOLNCC) to report the accident. The DOLNCC contacted Steven Polgar, supervisory mine safety and health inspector. Polgar contacted Brad Breland, assistant district manager. Polgar then contacted Michael Tefertiller, staff assistant, who assigned Lee Hughes, supervisory special investigator, as the lead investigator, and Ruben Ruiz, mine safety and health specialist, as a member of the accident investigation team.

On March 12, 2026, at 7:00 a.m., Polgar arrived at the mine and issued an order under the provisions of Section 103(k) of the Mine Act to ensure the safety of the miners and preservation of evidence. Polgar secured the area and gathered preliminary information.

On March 13, 2026, at 9:00 a.m., Hughes and Ruiz arrived at the mine. MSHA's accident investigation team conducted an examination of the accident scene; interviewed miners, mine management, contractors, and contractor management; and reviewed conditions and work practices relevant to the accident. For reference, a list of persons who participated in the investigation can be found in Appendix C.

DISCUSSION

Location of the Accident

The accident occurred in the 4590-surface maintenance shop.

Equipment Involved

The equipment involved in the accident was a Sandvik DD422i drill rig, Company No. JB-03. This is an underground double boom drill used in the mining process to extract copper ore. It is used for face drilling, bolt hole drilling, and bolting in hardrock mining environments. The rotary actuator is a key component of the drill unit feed system. Its main purpose is to rotate the drill boom during the drilling process, enabling the bit to cut through rock efficiently.

MSHA observed Redpath personnel conduct a test of the rotary actuator. After the air was safely bled out of the rotary actuator, it was put through a series of movements. No other defects were identified that would have contributed to the accident.

Work Procedures

The original equipment manufacturer (OEM) procedures were not followed during the installation of the rotary actuator. The OEM states before attaching the rotary actuator to the boom, air should be removed or bled from the hydraulic system. This is accomplished by attaching the hydraulic lines to the rotary actuator with the S1 bleeder screw facing up. The hydraulic system is then used to rotate the rotary actuator to an end position, after which the S1 bleeder screw is opened until no escaping air is detected. The S1 bleeder screw is then tightened and bleeder screw S2 is opened. Bleeder screw S3 is opened after bleeder screw S2. The OEM states this procedure is to be done 3 to 5 times until no air is detected escaping from the rotary actuator. As previously explained, Cameli, Van Hout, and Walston installed the rotary actuator to the boom and feed unit without first bleeding the air from the hydraulic system.

The rotary actuator rotates to the left and right. Because it needs to rotate 180 degrees in each direction, top dead center needs to be identified which is the function of the timing marks from the manufacturer. Investigators learned during interviews that miners verify timing marks to ensure they are correct, and during this verification air is bled out of the hydraulic system while the boom is on the ground, following the OEM process. Here, Cameli stated the rotary actuator already had timing marks so there was no need to time it; they could just install it.

Investigators determined that air in the hydraulic system created a void in the rotary actuator chambers, preventing the necessary hydraulic pressure from holding the feed unit in place. Additionally, when Cameli attempted to bleed air from the hydraulic system, the rotary actuator was attached to the boom and feed unit while elevated and not blocked against hazardous motion. Investigators determined these factors contributed to the accident.

Examinations

Cameli and Van Hout conducted a workplace examination for the area at the beginning of their shift. No defects or safety issues were noted on the examination that would have contributed to the accident.

Training and Experience

Cameli had 5 years and 5 weeks of mining experience, all as a mechanic. Cameli had 1 year and 43 weeks of experience with Redpath, and 21 weeks and 3 days of experience at the Kennecott Keystone Underground mine. Redpath hired Cameli as an experienced mechanic who had experience working on underground mining equipment, including blocking against hazardous motion. Cameli received experienced miner training on October 6, 2025. According to interviews, the rotary actuator is typically replaced once per year, and Cameli had previously performed this task. However, Cameli asked Van Hout what the bleeder screws were, indicating Cameli was not familiar with the task. Investigators were unable to determine if Cameli received task training on the OEM procedures for the installation of the rotary actuator.

Van Hout had approximately 12 years of experience as a mechanic at the time of the accident. He started working for Quality Mechanical Repair in October 2024. He received experienced miner training on January 16, 2026, and site-specific hazard awareness training on January 17, 2026. Van Hout had previously replaced the rotary actuator and was knowledgeable on the OEM procedures.

Walston had approximately 21 years of experience as an equipment operator at the time of the accident. He had approximately 1.5 years of experience working for Redpath at the Kennecott Keystone Underground mine, where he is currently a Jumbo drill operator. He received experienced miner and site-specific hazard awareness training in October 2024. Walston did not have experience as a mechanic and was not task trained on the OEM procedures.

ROOT CAUSE ANALYSIS

The accident investigation team conducted an analysis to identify the underlying cause of the accident. The team identified the following root cause, and the contractor implemented the corresponding corrective action to prevent a recurrence.

Root Cause: The equipment was not blocked against hazardous motion.

Corrective Action: The contractor re-trained their mechanics on the importance of energy control and isolation.

CONCLUSION

On March 12, 2026, at 5:13 a.m., Brian Cameli, a 37-year-old contract mechanic for Redpath with over five years of mining experience, died when the feed unit of the drill rig he was working on rotated suddenly and crushed him.

The accident occurred because the equipment was not blocked against hazardous motion.

Approved By:

_____ _____

Nickolas Gutierrez — Date

District Manager

ENFORCEMENT ACTIONS

1. A 103(k) order was issued to Kennecott Utah Copper LLC.

   A fatal accident occurred on March 12, 2026, at 5:13 a.m. This order is being issued under the authority of the Federal Mine Safety and Health Act of 1977, under Section 103(k) to insure the safety of all persons at the mine and requires the operator to obtain the approval of an authorized representative of MSHA of any plan to recover any person in the mine or to recover the mine or affected area. This order prohibits any activity in the affected area. The operator is reminded of the obligation to preserve all evidence that would aid in investigating the cause or causes of the accident in accordance with 30 CFR 50.12.

2. A 104(a) citation was issued to Redpath USA Corporation for a violation of 30 CFR 57.14105.

   On March 12, 2026, at 5:13 a.m., a fatal accident occurred when the feed unit on a Sandvik DD422i drill rig rotated and pinned a contract mechanic between the feed unit and the floor. The contractor did not block the feed unit against hazardous motion while performing work on the rotary actuator.

APPENDIX A – Sandvik DD422i Drill Rig



APPENDIX B – Rotary Actuator on Feed Unit 1

3.2.4 Drilling unit

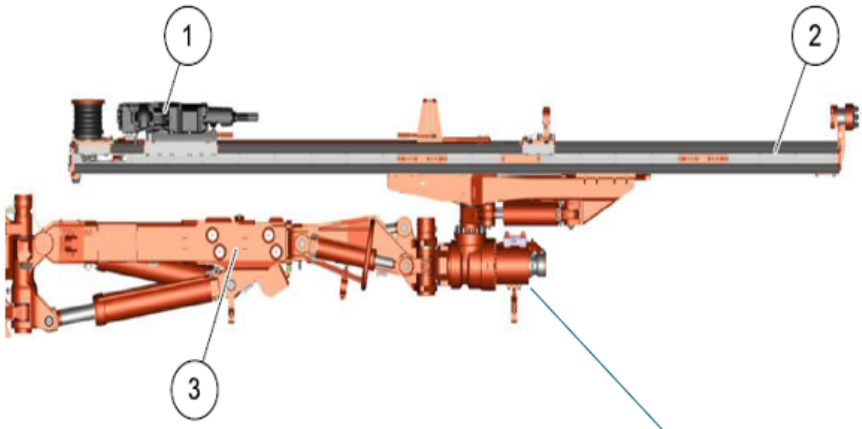

1 Hydraulic rock drill
2 Cylinder feed
3 Boom

APPENDIX C – Persons Participating in the Investigation

Kennecott Keystone Underground

Braden York	Senior Manager Underground Operations
Russell Hardy	Manager Underground Operations
Dustin Croff	Manager Asset Management
Shane Sandbak	Senior Advisor Health Safety and Environment
Ahmed Moustafa	Maintenance Planner
Scott McKay	Mine Monitoring and Control Specialist

Redpath USA Corporation

Michael Boomgaarden	Mechanical Superintendent for the U.S.
Nathan Houle	Asset Manager
Cory Cole	Area Manager
Steve Immenschuh	Project Manager
Luke Bowers	Maintenance Superintendent
Dugald Best	Health Safety & Environments Training Manager
Phillip Clark	Shift Supervisor
Curtis Kluth	Master Mechanic
Jarred Lott	Master Mechanic
Daniel Markle	Master Mechanic
Roberto Salinas	Master Mechanic
Daniel O'Dell	Lead Mechanic
Toivo Markle	Lead Mechanic
Nathanyal Parker	Lead Mechanic
Matthew Pike	Lead Mechanic

Quality Mechanical Repair

Moises Dominguez	Owner
Elijah Van Hout	Mechanic

Mine Safety and Health Administration

Lee Hughes	Supervisory Special Investigator
Ruben Ruiz	Mine Safety and Health Specialist